visited on 12/7/2012

views of the turbines. However, mitigating in this fashion may compete with the location constraints of a viable wind farm, as noted above.

Some options for key aesthetic design, construction, and operation measures for consideration

- ✓ Employ turbine units (towers, nacelles, and rotors) that are uniform and balanced in shape, color, and size.
- ✓ Prohibit the use of commercial markings or messages on the turbines.
- ✓ Limit markings and lighting on the turbines to the minimum required for safety purposes, and synchronize flashing warning lights.
- ✓ Where possible, limit the amount of security lighting, or use lights activated by motion sensors.
- ✓ Install power collection cables underground wherever feasible.
- ✓ To the extent practicable, site substations, service buildings, and other project support facilities in locations where they will be less visible, and design the structures to harmonize with their visual setting.
- ✓ Locate project access roads to limit their visibility and potential to create erosion.
- ✓ Maintain project facilities regularly during operation (including repair or replacement of inoperable turbines or parts, regular painting, and cleaning), minimize outside storage of materials or equipment, promptly remove any debris or defective equipment, and keep the site orderly.

5.4 Shadow Flicker

5.4.1 Impact Analysis

Shadow flicker is the term used to describe the effect caused by the shadows cast by moving wind turbine blades when the sun is visible. This can result in alternating changes in light intensity perceived by viewers. Since wind turbines are usually located relatively far from potential shadow receptors, shadow flicker typically occurs only at times and locations of low sun angles; this is most common just after sunrise and just before sunset, and in relatively higher latitudes (e.g., more northerly areas in the Northern Hemisphere). Shadow flicker does not occur when the sun is obscured by clouds or fog, or when wind turbines are not operating, or when the blades are at a 90° angle to the receptor. While shadow flicker can be perceived outdoors, it tends to be more noticeable in rooms with windows oriented to the shadows. A wind turbine's shadow flicker impact area does not generally extend beyond 2 kilometers, and high-impact durations (>200 hours per year) are generally located within approximately 300 meters of the turbine. Shadow flicker typically lasts less than 20 minutes.

The potential for shadow flicker has been raised as a visual issue by close neighbors of wind farm projects. Shadow flicker analysis for a wind farm is typically performed through computer-based mapping and modeling. The software packages that wind energy developers commonly use to locate wind farms and evaluate feasibility contain modules that perform shadow flicker analysis. The analysis is based on a digital terrain model, turbine locations and elevations, density and location of trees, receptor locations and elevations, and data relating to sun exposure and turbine

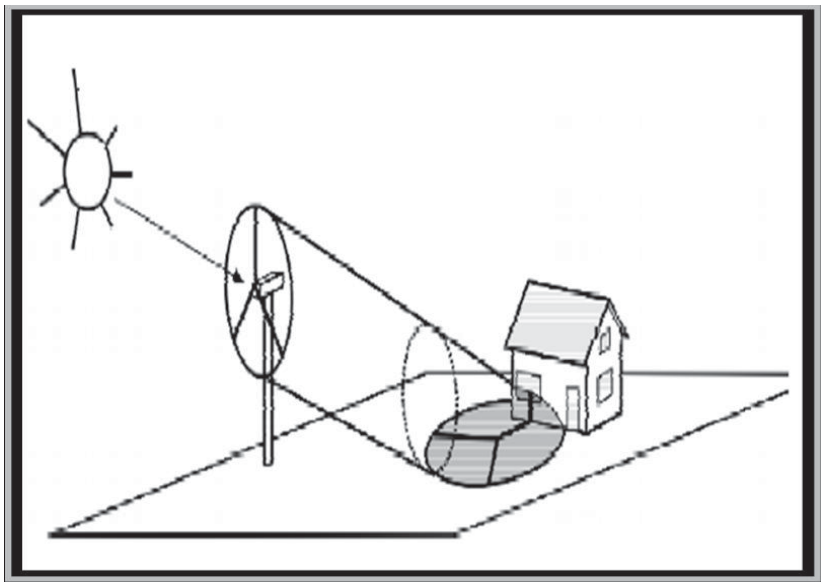

Representation of shadow flicker impact.

visited on 12/7/2012

operating times. Through the model analysis, it is possible to calculate the specific frequency, timing, and duration of shadow flicker at a specific receptor location. When such an analysis is performed for a wind farm, the focus is usually on the number of affected receptors and the numbers of hours per year in which they may experience shadow flicker. Thus this analysis often requires the early identification of the location(s) of all residences or other sensitive receptors within the project vicinity.

5.4.2 Mitigation

Mitigation options for potential shadow flicker impacts can attempt to address shadow flicker at the receptor location or at the source (the wind turbine). A common practice with projects for which shadow flicker has been raised as a concern has been to conduct more detailed investigation of site-specific conditions at individual receptor locations highlighted in the impact modeling analysis. On-site investigation of factors such as tree screening and building and window orientation can usually determine whether potential impacts indicated in the modeling would in fact occur, and to what extent. If such existing mitigating factors are not present, agreements between the project developer and landowners can provide for landscape screening or window treatments (such as curtains, blinds, or shutters) to reduce or eliminate exposure to shadow flicker.

If shadow flicker impacts are unavoidable through site selection, the developer may work closely with the landowners or other receptors to come to agreement on other potential mitigation measures specific to the project.

5.5 Sound

Wind turbine manufacturers have made significant strides since the early days of the industry in reducing turbine noise. Most people's reaction to turbines, even up close, is that they are much quieter than they expected. However, because wind projects are typically located in rural areas where pre-existing background sound levels are low, an assessment of potential impacts to neighbors and other sensitive receptors is often prudent.

Wind turbine manufacturers have made significant strides since the early days of the industry in reducing turbine noise. Most people's reaction to turbines, even up close, is that they are much quieter than they expected.

5.5.1 Impact Analysis

The sounds that most turbines emit are caused by the passage of the blades through the air – the aero-acoustic "swoosh." This sound is not dissimilar to the sound made by the wind itself passing through trees or

visited on 12/7/2012

across the ears of a listener. It is, however, distinct from such sounds in that it can occur in pulses corresponding to the passage of the turbine's blades as the rotor turns. It tends to be most noticeable in the middle range of turbine operating wind speeds, when the masking sounds of the wind are not at their highest level.

Some turbines also emit tonal sounds, caused by mechanical components. While tonal sounds may not result in a higher overall level of sound emissions (in terms of loudness), they are more noticeable. Most states and localities establish noise limits at property boundaries based on specific sound pressure levels measured in decibels.

Most if not all turbine manufacturers provide sound power level data determined in accordance with the International Electrotechnical Commission's (IEC) international standards. The IEC method establishes the acoustic reference wind speed of 8 m/s at 10-meter height. Although often misunderstood, this does not require that a measurement be made with 8 m/s winds at a height of 10 meters above the ground. Typically, the measurement is made using a microphone at ground level at a given distance from the turbine base, and then a series of mathematical calculations, defined by the IEC and using the manufacturer's power curve for the turbine, are applied to the results to standardize them for the reference wind speed and location. The purpose of this standardization is to allow comparison of different turbines and different hub heights. The sound power levels are then used to predict overall project sound emission levels. Commercial sound emission modeling software utilizes a variety of national and international algorithms (sound propagation standards, for example ISO 9613-2) with varying degrees of sophistication.

One representative example of such a model, as applied to a development project, appears on the next page. This example uses 1.5-MW machines (generic) on 80-meter towers spaced 220 meters apart (or more). The rings around the turbines represent sound level iso contour lines in decibels, and the scale along the side of the drawing is in meters.

While such computer models are useful, and often reflect conservative assumptions, they may not be able to account for all of the nuances of particular situations. For example:

- They may not take into account differences in upwind and downwind propagation; rather, some form of downwind propagation in all directions may be presumed.

Oregon assesses sound emissions with respect to frequency (in terms of one-third octave band noise levels). This approach also attributes greater sound impacts to sounds with tonal components.

Example

visited on 12/7/2012

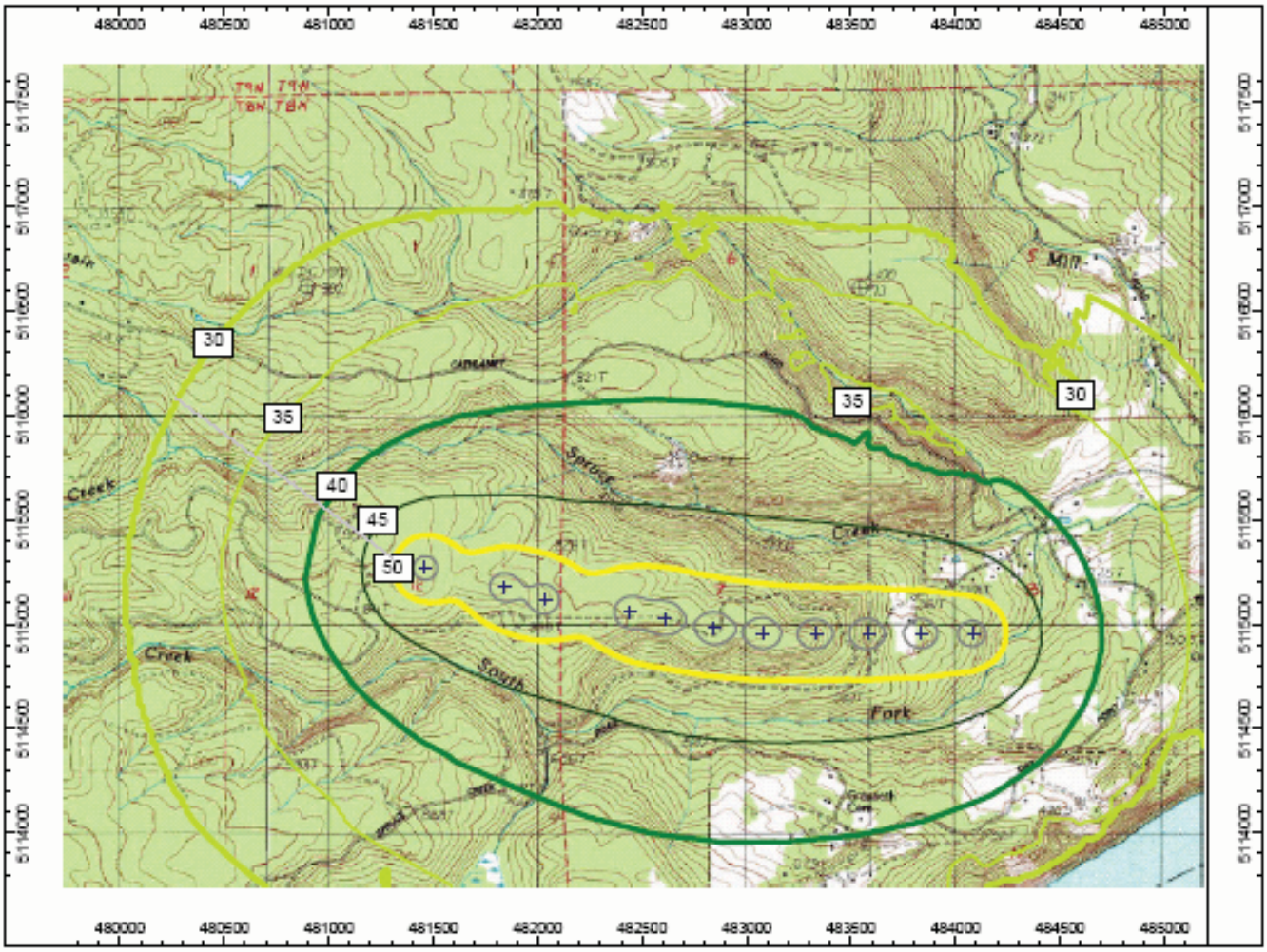

Example results from sound contour line model.

- They may or may not be programmed to take into account the relative elevation difference between the turbine and a particular sound receptor. This would affect the straight-line distance between those two points over which sound is assumed by the model to travel.
- Models will typically not predict the sound levels created by the wind itself, which often has a masking effect. For this, it is necessary to measure the background sounds at a particular location with the proper equipment, typically prior to installation of the turbine or turbines. The relative increase in sound from the project may be as important, or more important, than the absolute sound levels of the project itself.
- Attention should also be paid, and appropriate comparisons made, to other sound-emitting uses permitted under an

visited on 12/7/2012

ordinance, to ensure that wind turbines are not being singled out on this basis.

- There are many other factors that may need to be taken into consideration to thoroughly assess sound impacts from wind turbines.

Therefore, it is important to have an experienced acoustical consultant evaluate projected sound emissions from each proposed wind farm site and help develop appropriate sound mitigation measures when necessary. Applicable environmental impact review and local land use laws often require that such studies be conducted.

While human perception of sound levels is substantially subjective, it is possible to accurately compare various sound levels with commonly experienced sounds.

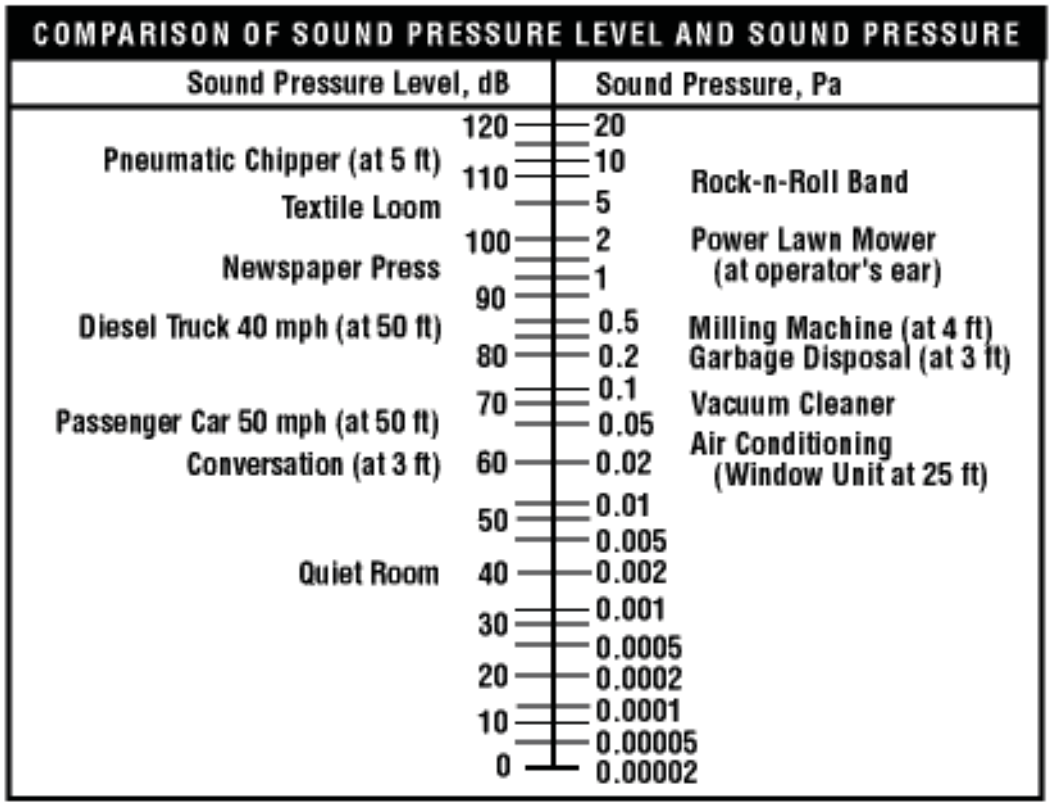

Source: Canadian Centre for Occupational Health and Safety.

Finally, it is important not to overlook the subjective nature of noise. Each individual may have a different sensitivity to various types of noise. In some situations, those who are opposed to or not part of the wind project may be more annoyed by the same sound than those who are in favor of, or directly involved in the project.

visited on 12/7/2012

Ultimately, local planning or zoning approvals for a wind farm usually require acceptance by local officials of the sound levels from turbines at certain receptors (*Section 4.3*). Many communities have specific noise limits at property boundaries in the nuisance provisions of their local ordinances. It is important to work with a qualified acoustical consultant to demonstrate that the project will meet any required sound levels. Alternatively, if a combination of mitigation measures such as those discussed below is not sufficient to meet noise limits at specific sites, then a zoning variance or special approval might be negotiated with local officials, typically involving some form of compensation for affected neighbors.

Models will typically not predict the sound levels created by the wind itself, which often has a masking effect. For this, it is necessary to measure the background sounds at a particular location with the proper equipment, typically prior to installation of the turbine or turbines. The relative increase in sound from the project may be as important, or more important, than the absolute sound levels of the project itself.

5.5.2 Mitigation

Although sound impacts at most wind farm sites are anticipated to be minor, depending on the specific location, the following mitigation measures could be considered to help meet any local sound limits and to address the concerns of sensitive nearby receptors.

Sound mitigation techniques to consider:

- ✓ Siting turbines beyond a minimum setback distance to all residential structures (such setbacks may be prescribed by local ordinance or negotiated with local officials).
- ✓ Implementing best management practices for noise abatement during construction, including use of appropriate mufflers and limiting hours of construction.
- ✓ Limiting the cutting/clearing of vegetation surrounding the proposed substation.
- ✓ Adding landscape features to help screen specific receptors.
- ✓ Keeping turbines in good running order throughout the operational life of the project.
- ✓ Notifying landowners of certain construction noise impacts in advance (e.g., if temporary blasting becomes necessary).
- ✓ Pursuing development agreements with neighbors whose residence is located within a certain distance of a project turbine.
- ✓ Implementing a complaint resolution procedure to assure that any complaints regarding construction or operational noise are promptly and adequately investigated and resolved.

5.6 Cultural and Historical Resources

Cultural resources at or near proposed wind farm sites may be archaeological, architectural, or other resources that include, but are not limited to, objects, sites, buildings, structures, and traditional cultural places. In general, archaeological and architectural cultural resources may be related to either the prehistoric (before written records) or the historic (starting with written records) time periods. Traditional cultural places are generally areas that are material to an aspect of cultural

visited on 12/7/2012

heritage, including natural features that may have cultural associations important to a particular ethnographic or ethnic population.

Cultural resources that meet the criteria for eligibility on the National Register of Historic Places (NRHP) are considered significant and are referred to as historic properties (*Section 4.1.3*).

5.6.1 Impact Analysis

The construction and operation of wind energy projects may interfere directly or indirectly with cultural resources. Some examples of direct impacts on cultural resources include alteration of an archaeological site or an architectural structure due to construction activities, or alteration of locales where traditional cultural activities occur or have occurred due to project construction and operation. Indirect impacts include changes that may occur in or near a significant archaeological site, architectural resource, or traditional cultural place. Examples of potential causes of these indirect impacts can include:

- The location of the project within a significant cultural resource's viewshed.
- The introduction of noise or flicker shadow within a historic property setting.
- The reduction of access to historic properties as a result of project construction and operation.

Any direct or indirect impact that alters a significant cultural resource's location, setting, design, materials, workmanship, feeling, or association may be considered an adverse effect under the laws protecting cultural resources.

When a project is proposed for location near cultural resources, wind developers are usually required to conduct studies to provide information that will allow agencies to understand if the proposed project may affect such resources. Studies in support of Section 106 of the National Historic Protection Act (NHPA) and in support of state-specific requirements should be performed by qualified cultural resources professionals, as defined by federal regulation (36 CFR 61). The local State Historic Preservation Officers (SHPOs) sometimes maintain lists of qualified professionals who conduct such cultural studies within the area of the proposed project. The regulatory framework for cultural and historical resources is summarized in *Section 4.1.3*.

visited on 12/7/2012

If historic properties are located within the project's area of potential effects (APE) (i.e., the geographic area within which a project may cause physical, visual, or audible effects on the character or use of historic properties), the wind developer may want to identify them early in the siting process and/or develop a plan that outlines steps to mitigate any potential adverse effects. The geographic extent of the APE can vary from state to state and project to project. Developers should consult with the SHPO and relevant permitting agencies to establish a project specific APE for cultural impact analysis.

The geographic extent of the APE can vary from state to state and project to project. Developers should consult with the SHPO and relevant permitting agencies to establish a project specific APE for cultural impact analysis.

In the early planning stages, a wind developer should consult available information to ascertain whether a potential project area may contain significant cultural resources. For purposes of this background review, the wind developer may choose to assess an area larger than the actual area defined for the project itself.

Wind developers can take the following steps to address cultural resources:

- Review NRHP list to determine if the project area contains NRHP-listed cultural resources, including sites classified as Historic Districts and/or National Historic Landmarks.
- Review archaeological site files maintained by the relevant SHPO, State Archaeologist, or other relevant state office, to view the number and types of previously recorded sites that are known within the project area. In some states, these sites are not available for review by the general public but are made accessible only to cultural resources professionals.
- Review architectural site files maintained by the relevant SHPO to determine the number and distribution of structures previously inventoried and recommended as potentially eligible to the NRHP.
- Review historic cartographic sources and compare these to current property maps of the project area to assess the number of structures currently located within the project area that may date back 50 years or more or to estimate the number of potential historic period archaeological sites that may be present within the project area.
- Review histories of the local areas in the vicinity of the project to identify significant events, famous individuals or groups,

visited on 12/7/2012

special technological achievements, etc., which may suggest the potential for associated cultural resources of significance.

- Review maps of the project area to ascertain the presence of federally owned, state-owned, or Native American federal reservation property with the potential to contain significant cultural resources.
- Develop a site sensitivity model using appropriate region-specific variables to assess the potential for various sub-areas within the project area to contain cultural resources that may be potentially eligible as historic properties.
- Prior to implementing studies, identify any potential regulating drivers and/or required permits (*Section 4.1.3*).
- Consult with the SHPO and other reviewing agencies to identify any potentially significant sites and to understand required or acceptable field strategies prior to implementing studies of the project area.
- Perform archaeological field studies, architectural historical inventories, and other data gathering (possibly involving interviews with local tribes or other ethnic groups) to identify potentially NRHP-eligible cultural resources located within the project area.

Through such review of available information and subsequent identification, testing, and evaluation studies, the wind developer can determine the cultural resources that may be present within a proposed project area.

5.6.2 Mitigation

If potentially significant cultural resources are identified early in the site layout process, a wind developer can consider minor redesign of project elements to avoid or minimize adverse impacts.

If potentially significant cultural resources are identified early in the site layout process, a wind developer can consider minor redesign of project elements to avoid or minimize adverse impacts. If potentially significant resources cannot be avoided by the project, a wind developer should consult with the SHPO, other reviewing agencies, and any relevant Native American tribes or other appropriate local cultural organizations to provide an assessment of the impact on such resources and to develop appropriate mitigation for the project's adverse effects. If NHPA Section 106 applies to the project, a wind developer should follow the process outlined at 36 CFR 800 (*Section 4.1.3*). If state regulations and guidelines apply, a wind developer should follow SHPO or other state agency guidance to fully

visited on 12/7/2012

identify, test, and evaluate potential impacts, thereby determining how to avoid or mitigate impacts.

5.7 Socioeconomics

Understanding the socioeconomic conditions of the community in which a project is proposed is important to the facility siting process. To understand the effect that a wind project would have on socioeconomic conditions, it is essential to understand the demographics (e.g., labor force, population, and housing) and economy (e.g., employment rates and opportunities, municipal budgets and taxes, and local school budgets and taxes) of the community and region. In addition, local residents may express concern over the unknown impact to local property values as a result of proposed wind power projects, while other residents may be concerned about tourism.

Example

The African nation of Eritrea is working with scientists at the Lawrence Berkeley National Laboratory to reach a goal of producing 50% of its electricity from wind energy. The nation's wind energy initiative has the potential to pay for itself in 5 years, as Eritrea creates revenue by producing an internal energy source and reducing its dependence on foreign oil. Eritrea has a population of 4.5 million and an average annual income of $250 per person.

5.7.1 Impact Analysis

The construction and operation of a wind farm can have socioeconomic impacts on a region or community. The extent of the potential impacts depends on the location and the size of project with respect to the local economy and industry. This section focuses on potential impacts of a wind project to the local economy and property values.

5.7.1.1 Local Economy

A wind project typically has a mixture of construction workers and operation and maintenance workers. Most wind farm projects tend to be located in rural and semi-rural areas, which may be more significantly impacted by the additional inhabitants than urban areas that typically have the capacity to accommodate this type of increase to the population. For wind farm projects in rural areas, the influx of non-local labor may put pressure on the local community to provide additional services and may impact short-term housing availability. These impacts are usually minimized because wind farm project construction lasts only an average of six months to one year, and local personnel can frequently fill ongoing operations and maintenance jobs. For projects located in remote areas, the project developer may need to provide temporary or permanent housing for construction workers. Typically, long-term housing for permanent employees does not present a problem because the permanent project staff is smaller than the construction workforce.

A wind project may increase the workload for police, fire, medical, and other similar services. Although major events such as fires (e.g., grass fires) are rare in the construction and operation of a wind project, industrial accidents may happen and therefore warrant development of

visited on 12/7/2012

emergency response plans. Wind developers may work with local and surrounding communities to educate and train local emergency response staff to handle potential events and to implement mitigation measures as necessary.

Construction personnel trenching for an underground collector cable. Photo courtesy of PPM Energy.

A wind project also will increase the temporary need for construction vehicles and equipment. This can create impacts on local communities, with a greater effect in rural areas, where availability of these vehicles may be limited, than in urban areas. Advanced planning by the wind farm developer should alleviate this problem. Construction equipment may be procured and transported from other areas.

Any road development or widening and paving would result in permanent infrastructure changes to the local community, which are generally, but not always, viewed as positive. For example, paving a dirt road would allow for future development, and widening a road may make general travel along the road safer. However, some people living along an access road may not want the road paved and widened, fearing a general increase in traffic and traffic speed, and eventually more development. These concerns regarding traffic are usually addressed in a traffic study, completed as a part of the project development process, with the developer offering mitigation measures if necessary. *Section 5.10* provides more information regarding traffic and transportation.

Studies have been conducted over the past few years to analyze the economic impacts of wind facilities. The Renewable Northwest Project (RNP) conducted a study on the 24-MW Klondike Wind Project in Sherman County, Oregon. The study examined the economic impact on a rural community resulting from construction and operation of a wind farm. The study examined local business activity, employment, landowner revenue, and tax revenue for the county. This study reported that the benefits of the wind project were widespread throughout the county and the surrounding region. The study concluded that "employment from development, construction, and operations stimulated regional businesses and continue to provide personal income in the county. Sherman County as a whole receives substantial

visited on 12/7/2012

tax revenues, while individual farmers receive additional income from royalty payments while continuing farming operations."

Another study initiated by NWCC found similar results. This study involved three wind energy projects, ranging in size from 25 MW to 107 MW (the Lake Benton I Project in Minnesota, the Vansycle Wind Project in Oregon, and the Delaware Mountain Project in Texas) The study found in all three cases a modest to moderate boost in economic activity attributed to the construction phase. All of the case study areas also benefited economically from continuing operation and maintenance activities, dependent on the size of the wind development, previous wind developments, and planned future wind developments. Additionally, the study found that the annual revenue from royalty payments received by households was a significant source of income and had a significant total effect on the local economies.

To help assess local impacts on the economy from a proposed wind farm, the Job and Economic Development Impact (JEDI) or Regional Input-Output (RIMS) models can be used to analyze the economic impacts of construction and operation. Users enter basic information about a wind project (e.g., state location, year of construction, size of the facility) to determine project cost (i.e., specific expenditures) and the income (i.e., wages and salary), economic activity, and number of jobs that will accrue to the state or local region from the project.

Research has shown that tourism due to wind power can be promoted in certain areas, thereby impacting the local economy. Some wind developers and local communities are incorporating tourism with wind projects through such means as offering daily tours and constructing observation areas and informational kiosks. In Atlantic City, the Atlantic County Utility Authority (ACUA) hopes to establish a user-friendly control room at a wind farm offering a number of video displays for visitors. In addition, eco-tourism of wind farms is becoming popular. For example, Windmill Tours in Palm Springs, California offers daily tours marketed as the "Ultimate Power Trip" in which tour guides discuss the international history of wind energy, current utilization of wind power, and the future of electric industry.

Example

ACUA Wind Farm offers a Live Web Cam on its website with real time video of the wind turbines.

5.7.1.2 Property Values

Individuals faced with a new wind development near their property may question its effect on their real estate value. This issue has come up during the siting and review of wind power projects throughout the nation. There is currently limited documentation on the impact of wind turbines on property values. It is difficult to quantify the impact of wind projects on property values due to the variables that affect property

visited on 12/7/2012

values other than wind turbines. No study identified by AWEA concludes that projects negatively impact property values.

Variables that can affect property values in the vicinity of a wind farm include proximity to the wind farm, size of the wind farm, and type of community, such as farming communities or communities that are based on scenic natural assets such as ridgelines, shorelines, and unique/sensitive habitats.

The Renewable Energy Policy Project (REPP) conducted a quantitative study of property values in 2003 based on examination of over 25,000 property transactions. The REPP evaluated residential property values at 10 wind power projects (10 MW and larger) throughout the nation built between 1998 and 2001. For this study, data were gathered within 5 miles of the wind projects, which was determined to be the potential area of visual impact. In general, the REPP report concluded that commercial-scale wind turbines do not appear to harm "viewshed" property values. Specifically, the report found that for the majority of projects the property values increased more quickly in the viewshed than in the surrounding community.

ECONorthwest (2002) conducted another study for Kittitas County, Washington, located just north of Yakima County. The purpose of this study was to analyze and help quantify impacts in three key areas of interest: property values, economic impacts, and tax revenues. The study found that views of wind turbines would not negatively impact property values, wind plant construction would have significant economic benefits, wind plant operation would provide additional annual economic benefits, property tax revenues would increase, and tax revenues to the county would also increase.

As wind farms become more familiar to the general population, the proximity of wind farms may not be a major factor affecting property values. Nevertheless, concerns regarding property values should not be underestimated or dismissed. Public outreach can be a critical component in identifying the potential socioeconomic impact of the wind project and addressing the concerns of the local community (*Chapter 7*).

5.7.2 Mitigation

5.7.2.1 Local Economy

Socioeconomic impacts are difficult to assess, as they will vary by community and region. Therefore, the developer and local surrounding communities should work together and come to agreements on project specific mitigation for each proposed wind project. It is important that the nature and extent of socioeconomic

The developer and local surrounding communities should work together and come to agreements on project specific mitigation for each proposed wind project.

visited on 12/7/2012

impacts be understood locally. Researching and developing information on the type and extent of such potential impacts would assist the wind developer to develop appropriate mitigation measures to incorporate in the local permitting process. In most cases, developers can reach out to the local community early in the process to discuss mitigation measures.

The potential for the host community to be compensated in some manner by the developer is often an important factor in reaching agreement with local officials. Virtually all wind project facilities will be subject to property taxes. Alternatively, developers may seek to negotiate an agreement with the local taxing entities, often called a PILOT agreement (*Section 4.3.6*). By establishing a fixed set of payments over a specified period of time, the developer (and the project financers) will be able to better forecast long-term expenses, and the taxing authority will have a guaranteed level of income.

Many factors contribute to changes in the local economy. Employment from development, construction, and operations can stimulate local businesses and provide personal income in the county. Local cities and governments may receive additional tax revenues, while individual landowners may receive additional income from royalty/lease payments. In either case, the community benefits from the increased income.

Agreements between the wind developer and the local community, including police, fire, medical, and other, similar services, not only promote good will, but also establish protocols to handle potential events and maintain the lines of communication between the wind project and the host community.

5.7.2.2 Property Values

Many variables can affect property values in the vicinity of a wind farm, and these must be reviewed on a case-by-case basis. Typically, wind farms do not impact properties in a uniform manner, and the circumstances of each development can be different. Developers should work with individual landowners to discuss mitigation measures, if any, to protect property values and preserve the integrity of the property. Public outreach is a key component in addressing and mitigating any impacts to socioeconomic resources. *Chapter 7* provides more information regarding public outreach.

5.8 Public Health and Safety

Potential risks to public health and safety should be identified and addressed early in the development process. This section describes key health and safety issues and mitigation techniques to be considered.

visited on 12/7/2012

These risks and associated mitigation techniques may be incorporated into an overall emergency action plan to be used throughout construction and operation by project personnel in coordination with local emergency management officials. This coordination should be initiated early in the development process to ensure a sound emergency action plan to be carried through construction and operation.

Public health and safety risks and associated mitigation techniques may be incorporated into an overall emergency action plan to be used throughout construction and operation by project personnel in coordination with local emergency management officials.

5.8.1 Ice Shedding

Wind turbines can experience periods when the weather conditions will result in ice build-up on the exposed parts of the turbine. In addition, it has been observed that the moving turbine rotor is liable to accrete heavier quantities of ice than the stationary components of the wind turbine. It has also been observed that the rotor ice can break off, and if the rotor is moving, be cast some distance.

Field observations indicate that most ice shedding occurs as temperatures rise and ice thaws from the rotor. A typical scenario is that ice builds up on the rotor and on the wind sensors, which are mounted on the nacelle. Sensor malfunction normally causes automatic turbine shutdown in most modern wind turbines. In this situation, most turbines will restart only when the ice has thawed and fallen from the stationary turbine and the operator has reset the sensors. However, in certain situations the operator will accelerate the process by thawing the sensors and restarting the turbine with ice still on the rotor. This may lead to shedding of ice. Operations staff is more likely to be affected than the public.

Studies have been conducted to try to characterize how ice fragments are shed from the rotor blades. While limited information is available, evidence does suggest that there is a tendency for ice fragments to be dropped off, rather than thrown off, the rotor. Also, ice tends to shed more from the blade tips, and larger pieces of ice debris tend to fragment in flight.

5.8.1.1 Mitigation

Key steps to reduce the risk to the public or operational staff of injury due to ice shedding are provided. This should also be detailed in the facility's emergency action plan.

Possible Mitigation Measures to Reduce Threat of Personal Injury from Ice

- ✓ Design of turbine layout with appropriate setbacks from sensitive receptors and areas of regular public use to minimize risk of ice shedding injury.
- ✓ Education of operational staff about the conditions likely to lead to ice accretion on the turbine, the risk of ice falling from the rotor, and the areas of risk.
- ✓ Use of warning signs alerting anyone in the area of risk.
- ✓ Implementation of special turbine features that prevent ice accretion or operation during periods of ice accretion.
- ✓ Curtailment of operation of turbines during periods of severe ice accretion.

visited on 12/7/2012

5.8.2 Blade Drop/Throw

During normal operation, wind turbine rotor blades are exposed to centripetal, gravitational, and aerodynamic forces. In the course of each revolution, these forces create a cyclical combination of axial, bending, and torsional stress at each part of the blade. If all or any part of a blade detaches from the rotor, its trajectory will be dependent upon the loading and stress state at the time of failure, and on the type and progression of failure before separation. Acts of vandalism could conceivably damage rotor blades and cause a blade fragment to be thrown, although no such case has been documented. While cases of blade drop/throw have occurred, these incidents are rare and have generally been linked to improper assembly or exceedance of design limits. Today's improved wind turbine design and engineering make the likelihood of such an occurrence extremely remote.

5.8.2.1 Mitigation

Sound engineering design and quality control in the manufacture, construction, and operation of wind turbines are the most appropriate and effective means for reducing the potential for blade throw. Modern turbine braking systems, pitch controls, and other speed controls should prevent exceedance of design limits. Many permitting agencies have also established minimum required setbacks from residences, public roads, and adjacent property lines to provide safety buffers from potential blade throw. In instances where no required setbacks have been established, developers may consider voluntarily incorporating such setbacks into the siting and design phase.

Since its inception in 1974, AWEA has worked to develop wind industry consensus standards in partnership with the U.S. Department of Energy and other organizations that have a stake in the development of wind energy technology.

Example

5.8.3 Fire

During the construction period of a wind farm project, construction activities and personnel could increase the risk for fire hazard. Possible contributors to an increased risk include: increased number of workers in an area, operation of powered machinery, and storage and handling of fuel.

Historically, a small number of fires have been directly or indirectly attributed to operating wind turbines. The suspected causes of such fires include sparks or flames resulting from substandard machine maintenance, improper welding practices, electrical shorts, equipment striking power lines, and lightning. Instances of electromechanical failures in wind turbine generators that resulted in fire have also been documented. For the most part, they have been traced to the electrical systems of the turbines, but mechanical malfunctions such as overheated bearings could conceivably cause a fire. The nacelle of many