visited 2/18/2020

BEFORE THE
FEDERAL COMMUNICATIONS COMMISSION
WASHINGTON, D.C. 20554

	)	
Request for Comments of the Interpretation of	)	WC Docket No. 18-152 & 02-278
The TCPA in Light of the 9th Circuit's Decision	)	FCC DA 18-1014
Marks v. Crunch San Diego	)	
	)	

COMMENTS OF NOBLE SYSTEMS CORPORATION

Filed October 16, 2018

Karl Koster
Chief Intellectual and Regulatory Counsel
Noble Systems Corporation
1200 Ashwood Parkway
Atlanta, GA 30338

visited 2/18/2020

SUMMARY

Noble Systems, a provider of contact center premised-based software and cloud-based solutions, submits these comments in response to the Commission's Public Notice of Comments On Interpretation of the Telephone Consumer Protection Act ("Public Notice") in light of the 9th Circuit's ruling in *Marks v. Crunch San Diego, LLC*, No. 14-56834, 2018 WL 4495553 (9th Cir. Sept 20, 2018) ("*Marks*"). The Commission seeks comments, in part, to augment the record being developed in relation to *ACA Int'l v. FCC,* 885 F.3d 687 (D.C. Cir. 2018) ("*ACA Int'l*"). The *Marks* decision resulted in a broad holding where the court stated: "we read § 227(a)(1) to provide that the term automatic telephone dialing system means equipment which has the capacity—(1) to store numbers to be called or (2) to produce numbers to be called, using a random or sequential number generator—and to dial such numbers.[1]

The *Marks* court essentially adopted the plaintiff's proposed construction verbatim, which was premised on an incorrect technical understanding of the operation related to a "random or sequential number generator." On that incorrect basis, it appears the *Marks* court found the statutory definition ambiguous. Finding the statutory language ambiguous is a precondition for delving into the contextual and statutory interpretive aids in order to interpret the TCPA's autodialer definition anew. The resulting holding of the court is inconsistent with itself (as there are two differing statements of the holding in the decision), overly broad, and ambiguous as to its scope and application.

The *Marks* court appears to have accepted the plaintiff's contention "that a number generator is not a storage device; a device could not use 'a random or sequential number generator' to store telephone numbers" and used this understanding as the basis for finding the statutory language ambiguous.[2] However, a review of the technology at the time prior shows that this understanding is incorrect. First, all digital electronic devices that generate numbers for processing inherently store the number in some form of memory. Second, existing technologies at the time, as borne out by various identified U.S. patents, show that such random or sequential number

[1] As noted infra, the *Marks* decision stated two slightly different holdings, which vary as to whether dialing occurs "automatically" or not.
[2] *Marks*, p. 19.

visited 2/18/2020

generators used for dialing telephone calls further stored the numbers produced in files and then dialed the number. Thus, such devices could:

1) produce and dial a number (repeating as needed), or
2) produce a number, store it in a file (repeating as needed), and then dial the numbers in the file.

Because random and sequential number generators unequivocally stored numbers that were to be dialed, it makes sense to read the statutory language as proposed by the defendant, consistent with its plain meaning. Specifically, an ATDS encompasses equipment either stores or produces numbers, by either a random or sequential number generator, and which numbers are then dialed. Indeed, this interpretation covers the two alternatives shown to exist in dialers at that time, as borne out by U.S. Patent 4,741,028.

Thus, because the court did not have an adequate understanding of the technology at the time, the statutory language is not ambiguous as found by the court. Rather, the statutory language appears deliberately and carefully crafted to cover two known modes of operation for dialing numbers using random or sequential number generators. Because the statutory language is not ambiguous, it was improper for the court to proceed to interpret the language anew.

The Commission should be cognizant that the statutory language is not ambiguous, and is deliberately crafted to cover the known contemporaneous dialer technology at the time the TCPA was passed. The Commission does not have any basis from deviating from the plain meaning of the ATDS statutory definition in the TCPA in forming its rules.

In addition, comments are provided regarding the *Marks* court's opinion on a portion of the *ACA Int'l* text allegedly supporting that the statutory language is ambiguous, as well as the record supporting the Commission's ability to adapt to evolving technology under the TCPA.

visited 2/18/2020

TABLE OF CONTENTS

SUMMARY ..... i-ii

I. OVERVIEW 1

II. OVERVIEW OF THE *MARKS* DECISION 2

a. ATDS Statutory Definition 2

b. The Court Ignored The Context Of Particular Statutory Language At Issue 2

c. The Court Did Not Explain Why The Statutory Language is Ambiguous and Did So Without Understanding the Particular Technology at Issue 3

III. RANDOM AND SEQUENTIAL NUMBER GENERATORS 5

a. Brief History of Digital Logic and Technology 5

b. Sequential Number Generators 8

c. Random Number Generators 9

d. Digital Dialing Technologies Prior to Passage of the TCPA 10

e. There is Another Form of "Storing" Numbers by a Sequential or Random Number Generator 12

IV. THE 9TH CIRCUIT INTERPRETATION OF THE STATUTORY ATDS DEFINITION IS PROBLEMATIC 16

a. The First Definition Is Overly Broad 18

b. The Second Definition Is Ambiguous 18

V. *ACA INT'L* DID NOT ADDRESS WHETHER THE STATUTORY ATDS DEFINITION WAS AMBIGUOUS 22

VI. A CORRECTED VIEW OF THE RECORD OF THE COMMISSION'S AUTHORITY TO ADAPT TO NEW TECHNOLOGIES 23

VII. CONCLUSION 26

APPENDICES 27

visited 2/18/2020

I. OVERVIEW

One of the most dangerous roads to travel is found at the intersection of law and technology. While some courts regularly address complex technologies,[3] many others do so infrequently and may not be versed in addressing technological issues. Many appellant judges are admittedly limited in their understanding of technology, including digital electronics. As will be seen, a failure to understand the technology can result in an "accident" at this intersection, leading to poorly formed legal conclusions, including a conclusion that the TCPA statutory definition of an ATDS is ambiguous, when in fact, the statutory language is spot-on in addressing the technology and statutory goals of that time.

A proper understanding of the statutory definition of an ATDS in the TCPA, as well as evaluating the *Marks* decision, requires some basic understanding of the digital technologies used in that era, which is prior to the passage of the TCPA in 1991. With this understanding, it becomes evident that the TCPA's statutory language is not ambiguous. It becomes evident that random and sequential number generators used by telephone dialers in that era both "produced" and "stored" numbers. Further, in light of identified patents describing how random and sequential numbers could be used in dialers, it makes the utmost sense for the statute to be drafted using the existing language in order to encompass two obvious variations of how dialers could dial random or sequential numbers. In light of this understanding, the statutory language is not ambiguous and there is no justification to fashion an alternative interpretation of an ATDS based on reliance of the canons of statutory interpretation.

The *Marks* decision interpreting the scope of an ATDS is inconsistent, illogical, and ambiguous in its scope and application. The Commission should not follow the road taken by *Marks* and the Commission conclude the statutory language is, in fact, not ambiguous. The Commission should first ensure it has a thorough understanding of digital technology used in dialers at that time prior to evaluating whether the statutory definition of an ATDS is ambiguous.

[3] The Federal Circuit Court of Appeals is assigned to handle all appeals involving adjudication of patents, and therefore regularly address complex technology. Some of the judges in that court have formal technical or scientific educational backgrounds.

visited 2/18/2020

Once the technology is understood, the Commission will find the statutory language is clear, and the Commission is then obligated to use the plain language of the statute in fashioning its rulings.

II. OVERVIEW OF THE *MARKS* DECISION

a. ATDS Statutory Definition

The *Marks* court addressed the statutory interpretation of an ATDS, which is quite familiar by now:

> The statute defined "automatic telephone dialing systems" (ATDS) as follows:
>
> (1) The term 'automatic telephone dialing system' means equipment which has the capacity—
>
> (A) to store or produce telephone numbers to be called, using a random or sequential number generator; and
>
> (B) to dial such numbers.
>
> **Pub. L. No. 102-243, § 227, 105 Stat. 2394, 2395.**[4]

b. The Court Ignored The Context Of Particular Statutory Language At Issue

The *Marks* court properly ascertained that *ACA Int'l* set aside the Commission's 2015 and earlier regulatory orders interpreting the statutory ATDS definition, and set forth to interpret that language anew. The *Marks* court properly identified the first step of the analysis as starting with the "plain language of the statute."[5] The court also noted that "[i]t is also 'a fundamental canon of statutory construction that the words of a statute must be read in their context and with a view to their place in the overall statutory scheme.'" (*Id.*) In addition, the court stated: "In ascertaining the plain meaning of [a] statute, the court must look to the particular statutory language at issue, as well as the language and design of the statute as a whole." (*Id.*)

---

[4] *Marks* at 7.
[5] *Marks* at 18.

visited 2/18/2020

The key language at issue is "store or product telephone numbers to be called, using a random or sequential number generator," which the court found to be ambiguous. Thus, it is appropriate to delve into the context surrounding this particular statutory language. As discussed below, this conclusion appears to turn on the understanding that a "random or sequential number generator" found in dialing equipment could not store numbers. However, there is no evidence in the decision itself that the court delved into the meaning and understanding of this "particular statutory language at issue" (i.e., "random or sequential number generator" and its ability to "store" numbers), nor investigated the context of these terms from a technological perspective. After examining the context and particulars of these terms, it will be evident that the plain language of the statute is not ambiguous, and therefore the plain language of the statute should be applied.

c. The Court Did Not Explain Why The Statutory Language is Ambiguous and Did So Without Understanding the Particular Technology at Issue

The court sets up its conclusion that the statutory language of the ATDS definition is ambiguous with the following:

> Marks and Crunch offer competing interpretations of the language of § 227(a)(1)(A), but both parties fail to make sense of the statutory language without reading additional words into the statute.
>
> Marks points out that a number generator is not a storage device; a device could not use "a random or sequential number generator" to store telephone numbers. Therefore, Marks asserts, it does not make sense to read "store" in subdivision (A) as applying to "telephone numbers to be called, using a random or sequential number generator." 47 U.S.C. § 227(a)(1)(A). Instead, Marks contends that we should read the definition as providing that an ATDS is "equipment which has the capacity (A) to [i] store [telephone numbers to be called] or [ii] produce telephone numbers to be called, using a random or sequential number generator; and (B) to dial such numbers." In other words, a piece of equipment qualifies as an ATDS if it has the capacity to store telephone numbers and then dial them.
>
> Crunch, in turn, argues that due to the placement of the comma in the statute, the phrase "using a random or sequential number generator" modifies both "store" and "produce." Therefore, Crunch argues that the best reading of the statute defines an ATDS as "equipment which has the capacity (A) to store [telephone numbers produced using a random or sequential number generator]; or [to] produce telephone numbers to be called, using a random or sequential number generator; and (B) to dial such numbers." As such, to qualify as an ATDS, according to Crunch, a device must store

visited 2/18/2020

> telephone numbers that have been produced using a random or sequential number generator.
>
> After struggling with the statutory language ourselves, we conclude that it is not susceptible to a straightforward interpretation based on the plain language alone. Rather, the statutory text is ambiguous on its face.[6]

The court's holding on the interpretation of the definition of an ATDS is virtually identical to that posited by Marks.[7] These are shown below for comparison:

- Marks' Proposed Interpretation of the ATDS Definition:

  > [A]n ATDS is "equipment which has the capacity (A) to [i] store [telephone numbers to be called] or [ii] produce telephone numbers to be called, using a random or sequential number generator; and (B) to dial such numbers."[8]

- Courts Holding on the ATDS Definition:

  > Accordingly, we read § 227(a)(1) to provide that the term automatic telephone dialing system means equipment which has the capacity—(1) to store numbers to be called or (2) to produce numbers to be called, using a random or sequential number generator—and to dial such numbers.

It follows that the court was persuaded by the argument that "Marks points out that a number generator is not a storage device; a device could not use "a random or sequential number generator" to store telephone numbers."[9]

The court's basis for concluding the statutory language is ambiguous is not explicitly stated and thus appears predicated on adopting the understanding that a random or sequential number generator cannot be a storage device.[10] Based on that understanding, the conclusion is reached by

---

[6] *Marks*, at 19-20.
[7] When not italicized, "Marks" refers to the plaintiff and "Crunch" refers to the defendant.
[8] *Marks*, p. 19.
[9] The court seems to denigrate Marks interpretation as "reading additional words into the statute", but if the court's holding is similar to *Marks* interpretation, then this would apply to the court's own interpretation as well. It is unclear exactly what "additional words" the court is referring to in Marks' interpretation.
[10] This position was also bolstered by amicus briefs; see, e.g., Brief *Amici Curiae* National Consumer Law Center and National Association of Consumer Advocated, Docket #91, filed 5/21/2018, "Numbers cannot be stored using a random or sequential number generator, so the

visited 2/18/2020

the court that the statutory language is ambiguous. However, there is no discussion in the decision as to the context nor operation of the particular terms: "random or sequential number generator" and "store" numbers.

It would follow that if one of ordinary skill in the art would understand that random or sequential number generators as found in dialers of that time actually did storing numbers, then this would refute the basis for reaching the conclusion that the statutory language is ambiguous. This is where the intersection of the law meets technology, and without an understanding of some basic technological aspects, an accident is waiting to happen.

Without attempting to overwhelm regulators with technical details, an attempt is made to demonstrate that in the timeframe just prior to the passage of the TCPA (late 1991), one skilled in the art of digital electronics as applied to dialing technology would understand that the terms "random number generator" and "sequential number generator" would have the ability to "store" numbers for dialing. Further, they would have understood that "storing" the numbers could occur at different levels, such that "storing" could refer to copying the number into a file.

III. RANDOM AND SEQUENTIAL NUMBER GENERATORS

a. Brief History of Digital Logic and Technology

An understanding of the technology of random or sequential number generators and how numbers are stored and produced is necessary to understand the context of the statutory language. Thus, it is appropriate to have a basic understanding of that technology.

In the 1970's and 80's, the development of integrated circuits ("ICs") led to improvements in various products, including devices that originated telephone calls. ICs were developed that performed various common, low level functions. At that time, ICs contained anywhere from a few transistors to thousands of transistors, depending on the complexity of the functionality performed. One of the simpler forms of ICs involved configuring transistors to form basic logical operations. These basic operations included "AND" and "OR" comparisons of binary signals. For example,

---

phrase 'using a random or sequential number generator' must modify only the word 'produce.'" (Page 10.)

visited 2/18/2020

an output signal could indicate whether input Signal A was present "OR" input Signal B was present. The transistors were configured to perform a set of basic functions called "logic gates." The logic gates were diagrammatically represented in images such as shown below:

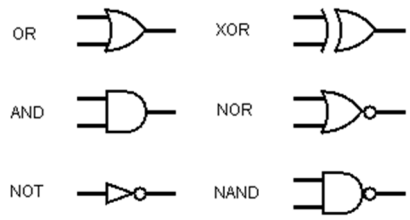

These logic gates, in turn, could be combined to form a "flip-flop", a basic memory cell, shown diagrammatically below:[11]

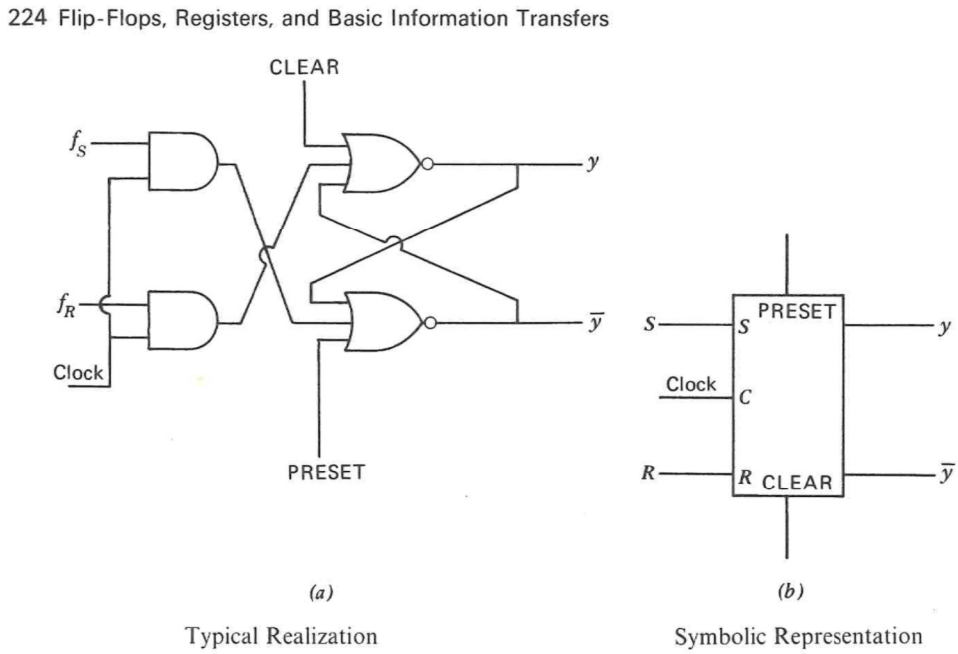

Figure 8-7. A *S-R* clocked flip-flop with PRESET and CLEAR.

[11] DIGITAL NETWORKS AND COMPUTER SYSTEMS, Taylor Booth, Wiley and Sons, 1978, page 224.

visited 2/18/2020

The flip-flop is the smallest memory cell in a digital system. As stated in a 1981 digital electronics textbook:

> The smallest unit of information a digital system can store is a binary digit, a bit, which has a logic value of 0 or 1. A bit of data is stored in an electronic device called a flip-flop or a 1 bit register. A flip-flop is a type of general memory cell and, as such, has two stable states in which it can remain indefinitely – as long as it operating power is not interrupted – and inputs which all its state to be changed by external signals.[12]

At this point, a fundamental principle is gleaned related to modern digital computers – the very existence of a number in a digital device requires that the number to be stored in a memory of some form. Stated another way, *if a digital circuit produces a number, the number must be stored in memory in some manner. Without storing the number, the number does not exist.* Thus, at a low level, "producing" a number requires "storing" it at a low level.

At this lowest level, this memory could be a flip-flop storing a single bit (i.e., a 1 bit register), which is undeniably a type of memory. But, storing a number either a 0 or 1 is limiting. A number of flip-flops could be arranged to store a larger number. When such arrangements are found internal to a microprocessor chip, this memory may be called a "register." Registers are used to hold a single numerical value. For example, the output number displayed on a calculator may be a number stored in a register.

It is possible to create larger memory arrays external to a microprocessor that are able to store many numbers. Such memory in a computing system was originally referred to as "primary memory" in academic circles; today, it is more commonly referred to as "RAM" (random access memory). Copying a number from a register in the computer microprocessor to the primary memory is also referred to as "storing." Other forms of non-electronic storage media are used, formally called "secondary memory" and this is typically embodied in magnetic storage media or more commonly referred to as "disc storage." Copying a number from RAM to disc is also referred to as "storing" the number.

[12] MICROPROCESSORS AND PROGRAMMED LOGIC, Kenneth Short, Prentice Hall, 1981, page 28.

visited 2/18/2020

b. Sequential Number Generators

As it name implies, a sequential number generator generates a sequence of numbers. This is also commonly referred to as a "counter."[13] In the context of dialing telephone numbers, a sequential number generator or counter could be used to generate a sequence of telephone numbers. In one dialer application, a user could define a particular area code (e.g., 202) and an central office code (418), and then use a sequential number generator to start dialing the last four digits (called the 'line number') of "0000" and ending with "9999."[14] Thus, the entire range of ten-thousand telephone numbers from 202-418-0000 to 202-418-9999 could be dialed.[15]

Prior to the passage of the TCPA, one popular family of small scale integration ICs available for use in digital dialers was known as the "7400" family of transistor-transistor logic ("TTL") ICs.[16] This family performed various functions including counters or sequential number generation for various applications.[17] The specification sheets for these ICs actually show how the individual flip-flops and logic gates are logically configured to construct the counters. Another representation of a counter from a digital electronics textbook is shown below that counts 0-7.[18] The outputs of the flip-flops store the number for the duration needed, until it is updated with the new number. The point of illustrating the circuit below is that it incorporates the aforementioned logic gates and flip-flops, and thus it inherently stores the numbers it produces.

---

[13] "Counter - …In electronics, a circuit that counts pulses and generates an output at a specified time." THE COMPUTER GLOSSARY, 6th edition, Alan Freedman, AMACOM, 1993.
[14] See, e.g., Telephone Sequential Number Dialer With Number Incrementing, U.S. Patent 4,188,510.
[15] This central exchange code is used by the FCC.
[16] See, e.g., https://en.wikipedia.org/wiki/7400-series_integrated_circuits.
[17] See, e.g., http://www.ti.com/lit/ds/symlink/sn74ls92.pdf. Although this is a more recent specification sheet (dated 2018), the same functionality was available in the 1970's timeframe. See, e.g., http://www.smcelectronics.com/DOWNLOADS/1976-TTL%20DATABOOK.PDF
[18] DIGITAL NETWORKS AND COMPUTER SYSTEMS, Taylor Booth, 2nd Edition, John Wily and Sons, 1978, page. 278.

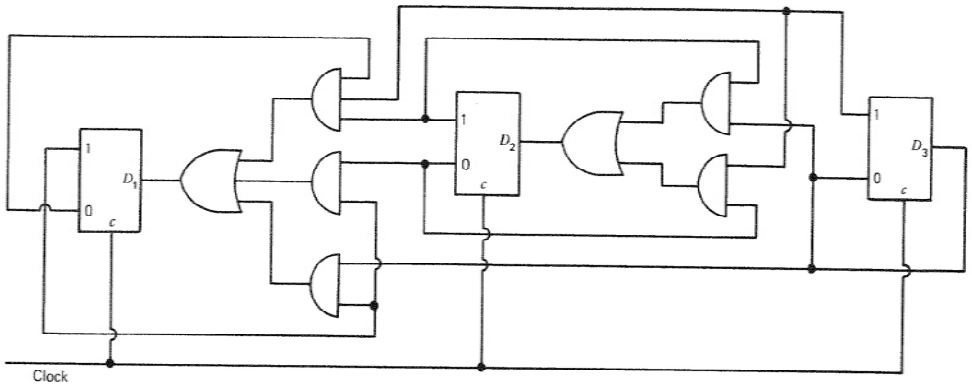

Figure 9-9. Realization of modulo 8 counter using *D* flip-flops.

c. Random Number Generators

Random numbers are important in analyzing and experimenting in various scientific fields. The development of truly random numbers is much more difficult than it appears, and extensive tomes have been written about generating random numbers.[19] In the area of computer science, the term "pseudo random numbers" is frequently used to refer to generating numbers that are "pretty good" at being random.

In the context of using digital electronics for dialing telephone numbers, a random number would be typically generated using a microprocessor executing a software program. Specialized ICs for performing this function were generally not available. Further, such microprocessors were becoming readily available in the 1980's timeframe. One academic paper from 1977 addresses how a microprocessor could be programmed with an algorithm to produce random numbers.[20]

---

[19] See, e.g., http://www.informit.com/articles/article.aspx?p=2221790. See, e.g., von Neumann J., "Various techniques used in connection with random digits," in A.S. Householder, G.E. Forsythe, and H.H. Germond, eds., *Monte Carlo Method*, National Bureau of Standards Applied Mathematics Series, 12 (Washington, D.C.: U.S. Government Printing Office, 1951): 36-38, available for download at https://dornsifecms.usc.edu/assets/sites/520/docs/VonNeumann-ams12p36-38.pdf .

[20] A Random Number Generator for Microprocessors, Microprocessors in Simulation, R. Mueller, D. George, and G. Johnson, Microprocessors in Simulation, Emulative Systems

visited 2/18/2020

As mentioned earlier, microprocessors incorporated internal memory storing the computational results, such as a random number. These memory locations are called "registers" and it is commonly recognized that these too, are a form of memory. ("One of the major uses of the flip-flops is to form registers which are used to store information during some portion of an information processing task."[21]) Because a microprocessor generates the random number based on a software program, the same software program could also copy (or "store") that number into other forms of memory, such as primary memory (RAM) or secondary memory (disc storage).

The above digression into digital electronics is intended to demonstrate that prior to the TCPA, the basic building blocks of digital technology (flip-flops) were well known for use in sequential number generators and in microprocessors that would store sequential and random numbers respectively. It is inherent that digital circuitry used to produce either a sequential number or a random number must at a basic, low level, store that number in some fashion. Thus, it is incorrect to assert that such number generators did not store numbers.

d. Digital Dialing Technologies Prior to Passage of the TCPA

However, the above does not support that such digital technology was used in dialers. For this purpose, a convenient source of technology specific information is maintained by the United States Patent and Trademark Office ("USPTO") in the form of patents. Patents illustrate not only the functions accomplished, but frequently detail how technology is used to implement those functions.

The use of a sequential number generator for initiating calls was well known prior to the passage of the TCPA in 1991, as evidenced by U.S. Patent 4,188,510, entitled "Telephone Sequential Number Dialer with Number Incrementing," filed in 1978.[22] Without digressing into

---

Company, April 1977. Available for download at:
http://citeseerx.ist.psu.edu/viewdoc/download?doi=10.1.1.862.531&rep=rep1&type=pdf

[21] DIGITAL NETWORKS AND COMPUTER SYSTEMS, Taylor Booth, 2nd Edition, John Wily and Sons, 1978, page. 232. See also, MICROPROCESSORS AND PROGRAMMED LOGIC, Kenneth Short, Prentice Hall, 1981, page 112 showing various registers in the 8085A microprocessor system.

[22] https://patentimages.storage.googleapis.com/24/d3/aa/275bab6d835b7a/US4188510.pdf

visited 2/18/2020

its specific operation, attention is drawn to FIG. 4, which represents "a functional block schematic diagram of circuitry for generating dial pulses to dial a telephone number."[23]

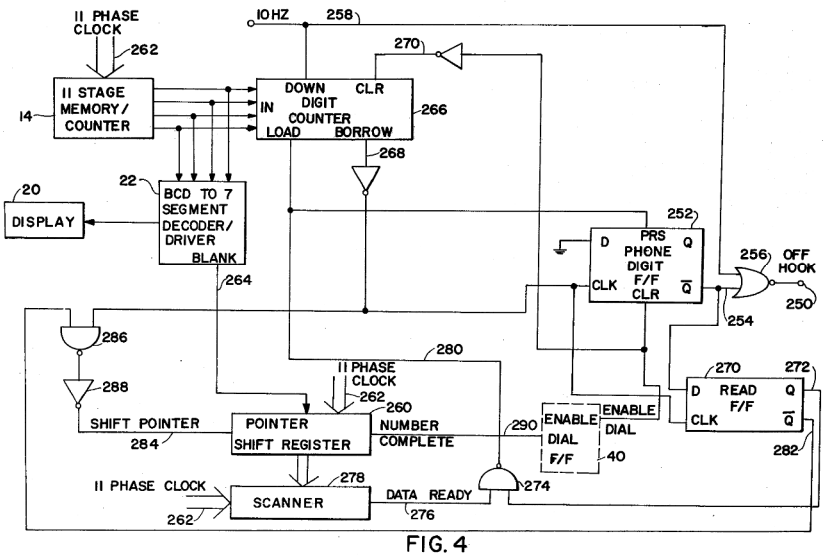

FIG. 4

Even without understanding how this circuit functions, it can be observed that it includes a "digit counter" 266, various flip-flops ("F/F") 270, 252, and logic gates 286, 274. In other words, this demonstrates that technology for sequentially dialing telephone numbers used the aforementioned digital circuitry and stored the numbers produced.

Another patent detailing a system for indiscriminate dialing is U.S. Patent 3,943,289[24], entitled "Automatic Telephone Caller," filed in 1974, 17 years prior to the passage of the TCPA. Random number generators were also well known, as described in U.S. Patent 4,922,520, entitled "Automatic Telephone Polling System," filed in 1989.[25] A quick examination of the various figures associated with these patents also shows that the dialers incorporated various logic gates and flip-flops, and so that they also stored the random/sequential numbers they produced for dialing.

[23] U.S. Patent 4,188,510, col. 3, lines 27-29.
[24] https://patentimages.storage.googleapis.com/37/2b/7c/20625e71e8090f/US3943289.pdf
[25] U.S. Patent 4,599,493, filed in 1984, disclosed a system for what is essentially predictive dialing.

visited 2/18/2020

The above patents illustrate that the technology used for generating and storing random or sequential numbers at that time actually was used to dial the numbers. This by itself should discredit any assumption that random or sequential numbers generators cannot be used to store information used for dialing.

e. There is Another Form of "Storing" Numbers by a Sequential or Random Number Generator

It seems unlikely that Congress was thinking of such a low level of technical detail involving flip-flop registers when it drafted the TCPA statutory language for "storing" and "producing" numbers using a random or sequential number generator. It seems more plausible that Congress was considering a higher form of "storing" numbers – storing numbers in a file. Congress was cognizant that certain telemarketers were using databased or lists (i.e., files) for dialing in their operations.[26]

As noted earlier, copying a number to primary memory or secondary memory is also a form of "storing." To illustrate this distinction between "storing" numbers in a file and "producing" telephone numbers to be dialed, reference is made to U.S. Patent 4,741,028, ("'028 Patent") entitled "Method of Randomizing Telephone Numbers," filed in 1986, a copy of which is provided as an appendix. This patent effectively illustrates the concepts of random number generation, sequential number processing, and most importantly, a concept of "storing" that is distinct from "producing" numbers that are dialed.

A high level summary/background of this patent is helpful. The TCPA identified one problem with sequential dialing, which was that this process could "tie up" multiple telephone lines going to a single location because the line was not released when the caller disconnected.[27] The '028 patent addresses this problem when dialing all 10,000 telephone numbers in a telephone exchange in sequence.[28] The '028 patent first dials random numbers selected in that range of

[26] See, e.g., House of Representatives Report 102-317,Report from the Committee on Energy and Commerce on the Telephone Advertising Consumer Rights Act, discussing use of databases in automated systems, page 7.
[27] See, e.g., Senate Report 102-178, p. 10 discussing the "disconnection problem."
[28] '029 Patent, col. 1, lines 15-30.

visited 2/18/2020

10,000 numbers. Thus, if the area/telephone exchange was, e.g., 202-418-XXXX, the system would use a random number generator to select the last four digits (XXXX) (a.k.a. "line number") to be dialed.

If numbers are randomly generated and dialed, then there is a potential problem of duplicating calls to the same number, which was to be avoided. (After all, the same number could be randomly selected twice or more.) The '028 patent recognizes that the first number selected would not have been previously dialed, so it could be dialed without any possibility of duplicating a call to the same party. But, then the second number randomly generated has a very slight chance of duplicating the first number; likely the second number would also not have been previously dialed. It is obvious as more numbers are randomly generated, (i.e., generating a few hundred random numbers), that eventually a random number would be generated that would duplicate a prior number used to make a call. To avoid dialing the same number twice, the system would store or flag in a table each random number generated, and then check each new random number generated to see if it duplicates a prior number produced. If a new randomly generated number was previously stored or flagged, it could be discarded. If a new randomly generated number was not previously stored or flagged, then it could be stored or flagged to avoid future duplicates. In this way, generating duplicate random numbers for dialing could be avoided.

To summarize the concept, a table of 10,000 numbers could be created in memory, and each time a random number was produced, the corresponding table entry (a "record") is updated/checked. If that table entry had been previously flagged, then the current number is a duplicate. If that number entry was not previously flagged as having been generated, then the number can be used. Flagging a table entry indicates it was produced. In this manner, each random number produced could be checked so that duplicates could be avoided.

While initially generated random numbers are unlikely to be duplicated, it becomes apparent that as more and more numbers are generated and flagged, more duplicate numbers will be encountered. While this scheme avoids dialing a duplicate number, the dialing of non-duplicate numbers becomes slower and slower. At some point, if 9000 numbers were randomly generated, it becomes more and more difficult to randomly generate the remaining (non-previously dialed)

visited 2/18/2020

numbers.[29] More specifically, if 9995 numbers have been selected, what are the odds that the next generated number will be one of these five unused numbers?[30] The '028 patent identifies that at a certain point, it would be more effective to review the list of entries in the table that have not been previously flagged, and then fill in those numbers in the table in sequence.[31] That way, all 10,000 numbers in the telephone exchange could be guaranteed to be dialed without duplicating calls to the same number.

The above effectively demonstrates how telephone numbers can be randomly generated and stored for dialing. However, the teachable moment of the '028 patent involves Figures 2 and 3. These figures provide insight as to two fundamental modes of dialer operation with respect to processing the numbers generated. In FIG. 2, the process involves generating a 'record' (i.e., a number to be called) and then immediately dialing the number after it is created.

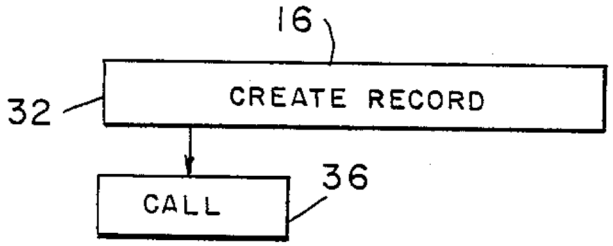

Specifically, the "records created in Steps 16 and 32 are concurrently used in a DTMF tone generator to place a call."[32] In essence, after each number is generated, the number is used to make a call, i.e., it is dialed.[33]

The other way in which the system could function is shown in FIG. 3. The text describes this as "Alternatively, as shown in FIG. 3, the records created in steps 16 and 32 may be added 38 to file 39 and subsequently called 40."[34]

---

[29] See, e.g., U.S. Patent 4,741,028, col. 1, lines 40-56.
[30] The odds would be 5/10,000.
[31] See, e.g., U.S. Patent 4,741,028, col. 5, lines 29-35.
[32] Patent 4,741,028, col. 5, lines 29-31.
[33] DTMF is "dual tone multiple frequency", commonly known as "touchtones."
[34] Id., col. 5, lines 31-33.

visited 2/18/2020

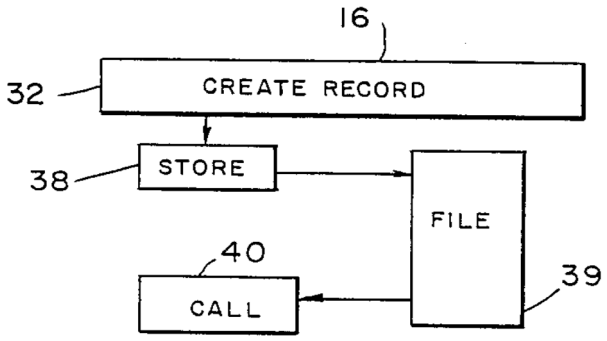

One skilled in the art would interpret the process 38 ("STORE") as copying the number from one memory storage (a register) to another memory storage (primary or secondary memory).

So, to recap, FIG. 2 refers to generating (or producing) a number, which is stored in a register at a low level, and then used to immediately originate a call. FIG. 3 refers to creating a number, which is copied into another memory (i.e., stored in a file) with other numbers for longer term storage. After the file is completed, the file is then used to originate calls.

Thus, the '029 patent demonstrates that it was well known to use a random number generator to:

- produce a random telephone number, which is then dialed, or
- produce a random telephone number, which is stored in a file, and then dialed.

In the first case, the process could be repeated as many times as needed. A number is generated and dialed and repeated until a target goal is reached (e.g., all 10,000 numbers were dialed). In this manner, the generated number, although stored in a register, would not be stored in a file, e.g., along with a collection of other numbers. In the second case, the generated numbers could be moved from a register to a file and stored with other generated numbers. Then the dialing of the numbers in the file is performed.

It becomes apparent that either method results in calls to all the numbers in the telephone exchange. From the perspective of regulating sequential calling, there is little different between:

1) producing a number and dialing it (and repeating this), or

visited 2/18/2020

2) producing a plurality of numbers, storing them in a file and then dialing the numbers.

If the purpose of the TCPA was to prohibit indiscriminate dialing for telemarketing calls, then both approaches should be prohibited. It would be ineffective for Congress to craft a statute that prohibited process #1, but allowed process #2, or *vice versa*. It would be obvious that a prohibition should encompass both common implementations. Congress addressed this by defining the scope of the ATDS to encompass either implementation.

In light of the above practices, the TCPA statutory definition of an ATDS would be stated as encompassing equipment having the capacity:

> (A) to store or produce telephone numbers to be called, using a random or sequential number generator; and
>
> (B) to dial such numbers.

This statutory language, interpreted by its plain meaning, would encompass equipment that operates as defined by FIG. 2 of the '029 Patent, where the number is produced by a random (or sequential) number generator and dialed, or operates as defined by FIG. 3 of the '029 Patent, where the number is stored in a file by a random (or sequential) number generator and then dialed.

In light of this, it is incorrect to conclude that the language is ambiguous because "a number generator is not a storage device; a device could not use 'a random or sequential number generator' to store telephone numbers."[35] The statutory language is not ambiguous. Rather, the TCPA language of an ATDS, is deliberately and perfectly adapted to address the dialing technologies of the time. Once the technology is understood, it becomes apparent the language is not ambiguous, but deliberate, purposeful, and appropriate.

IV. THE 9TH CIRCUIT INTERPRETATION OF THE STATUTORY ATDS DEFINITION IS PROBLEMATIC

[35] *Marks*, p. 19.

visited 2/18/2020

The 9th Circuit has two distinct holdings, which are referred to as the "first definition" and "second definition." The difference emphasized below.

1. Accordingly, we read § 227(a)(1) to provide that the term automatic telephone dialing system means equipment which has the capacity—(1) to store numbers to be called or (2) to produce numbers to be called, using a random or sequential number generator—and to dial such numbers.[36]
2. Because we read § 227(a)(1) to provide that the term "automatic telephone dialing system" means equipment which has the capacity—(1) to store numbers to be called or (2) to produce numbers to be called, using a random or sequential number generator—and to dial such numbers **automatically (even if the system must be turned on or triggered by a person)….**[37]

This raises a fundamental issue regarding whether "automatically" is included in the 9th Circuit's definition of an ATDS, and, if so, what does that term mean. The definition appears overly broad if the term "automatically" is not included. On the other hand, reading "automatically" introduces an ambiguous word and concept into the statutory language that is not stated in the original statutory language.[38]

The plain reading of the original statute definition prohibited dialing random or sequential numbers regardless of whether this was done manually or automatically, and this is consistent with its purpose of prohibiting indiscriminate dialing. It would seem facially deficient if the statute was interpreted to, e.g., prohibit automatic dialing of random or sequential numbers, but allow manual dialing of random or sequential numbers.

---

[36] *Marks*, p. 23.

[37] *Marks*, p. 24.

[38] Recall that the court denigrated Mark's proposal as reading additional words into the statute. *Marks*, p. 19. Is "automatically" the word referenced by the court?

visited 2/18/2020

a. The First Definition Is Overly Broad

The first function in the first definition ("store numbers to be called") resides in virtually every modern landline and wireless phone device, as they typically include features as speed calling, last number redial, or repeat dialing by storing the number. This requires storing numbers that are to be called. The 9th Circuit did not appear to be cognizant of the concepts disclosed *supra* regarding storing numbers in registers, primary memory, etc., so it is difficult to attribute some additional meaning to the court's use of "storing," such as storing in a file. Very few modern telephone devices do not store numbers in some form. One example of a telephone device which does not store numbers to be called is the rotary dial (e.g., Bell System Model 500 telephone set, circa 1950's), which did not incorporate digital electronics.

The second function, "dial those numbers," is found in virtually every consumer phone device. Very few manufacturers produce phones that do not allow dialing of a telephone number.[39] It would be a contradiction to have a phone that stores numbers but does not dial them. The purpose of storing numbers is to facilitate dialing (e.g., a speed dialing list).

The requirement to process a plurality of numbers, with respect to storing and dialing, is also extremely common. There is no implication that the definition requires storing or dialing within any time period or in a particular sequential order. Thus, storing and dialing one number, and then another number, would meet the definition. Thus, it seems that the first definition encompasses virtually all modern phone devices. This is too broad, and would encompass virtually all mobile phones.

b. The Second Definition Is Ambiguous

Assuming that "automatically" somehow limits how the numbers are dialed, this term could be interpreted to mean that some form of direct causal human intervention is required to effect the dialing of the stored number.

[39] There some special applications of phones configured to only receive calls. See, e.g., https://www.alzstore.com/phone-without-dial-pad-p/0077.htm.

visited 2/18/2020

There is no regulatory definition in the TCPA context of "dialing" that Noble Systems is aware of, let alone "automatic." The Commission could seek input as to the scope of that term ("dialing") as it would apply to the ATDS definition. Dial pulse dialing (available as the primary consumer option up to the 1950s, but still available today), required digit-by-digit entry by the human user, typically via a rotary dial phone. Similarly, dual-tone multiple frequency (a.k.a. "touchtone" phones) also require digit-by-digit entry by the human, typically via a push-button phone. These technologies resulted in sequential digits being signaled out from the phone to the phone switch.

Modern VoIP and wireless phones typically utilize a form of "en-bloc" signaling from the phone device to the switch, where all the telephone digits are sent in one message. A common form of interaction is illustrated with a cellular phone. The user may select each digit individually, but nothing is sent until the user presses a "send" button. Then, the phone sends a message with all the digits that the user entered. The switch receiving the call request with the digits cannot differentiate between the user having manually selected all the digits versus the user pressing a speed dial (or redial) function. It is unclear whether "automatically" is intended to limit any one of these particular forms of dialing.

i. The Timing of Human Intervention is Unclear

In the above examples, it is implied that the user is causing a call to be establishing in real time for that user. But, the word "automatically" does not necessarily imply such limitations. A fundamental question is how soon relative to the human intervention (i.e., entering digits) is the call required to be established? There are various "clicker" applications[40] for use in contact centers, which allow an agent to enter a number of call setup requests, which can be queued for future calls. For example, an agent could enter 1000 mouse clicks on Monday which are stored in memory, and cause 1000 calls to some unspecified number to originate later that day, or on another day, or as when needed for the agent. Would these be deemed "automatic" or not? Do the calls have to be set up immediately? Within an hour? Or with the same day?

[40] So called because a user "clicks" a computer mouse as input to request a call.

visited 2/18/2020

ii. Does the Human Input Require Identification of the Number To be Dialed?

Historically, when a caller dialed a number, the user had to know and then indicate the number to dial. Today, with smartphones, when a caller initiates a call, the caller may not readily know the digits being dialed, but may only know the name of the person the call is directed to. For example, a user dialing from a contact list may select an entry ("spouse at work"), but not readily know the number itself. Granted, the user could look up the number in the phone's directory, but too often with smart phones, the user forgets the number, and merely selects a name to be dialed. In a contact center, an agent may select a "dial now" function key and may not know the number. An agent may select a name on a screen without knowing the number to be dialed. The computer/phone device automatically maps the contact's name to the number stored, and uses that number. How does this fall within the scope of "automatic"?

Now, consider a more extreme example. An agent is presented with a document having 1000 account numbers and telephone numbers. Likely, they can only see 30-50 accounts at a time on their computer screen. But, the agent may select all the accounts in the document with a single function key, and that indicates to the dialer that all the numbers should be dialed. That input essentially indicates the first number in the list is to be dialed, and after completion, the second number is dialed, etc. The input does not indicate the number to be dialed, but rather a computer program determines that number. Is this allowed? If not, then how is it distinguish from the concept of mapping a contact name to a number? Does it matter if one input maps to multiple numbers? If so, then would having the agent enter a 1000 separate clicks (call setup requests) address this deficiency? If an agent enters a click, thereby causing a call to be established without knowing either the number or the name of the person the call, how is this different from asking a computer to select and dial a number?

iii. Does the Call Dialed by a User Have to be the Same Call Connected to that User?

Most often, individual users of a phone device originate calls for themselves. In a contact center, this could be different. Could Agent A originate a call on behalf of Agent B? Could Agent A manually dial a number resulting in a call being established, which is then transferred or

visited 2/18/2020

otherwise connected to Agent B, who is presently available? There various contact center architectures where one agent provides inputs used to originate calls at a later time which are then connected to other agents.

This configuration could be further modified by using the aforementioned timing requirements. Specifically, can Agent A dial a number today, which is used to establish a call tomorrow for Agent B? Does the determination of whether this involves an ATDS depend on whether Agent A manually dialed the digits or performed some type of "clicker" input? Or another case: can Agent A submit a request for some number in a list (without know specifically the name or number selected) to be dialed in the future and have that call connected to Agent B, whenever Agent B is available?

The scope of the term "automatically" is subject to interpretation, and is likely to result in extensive litigation to define its metes and bounds. The scope of how proximate human intervention is required to accomplish call origination would have to be defined in excruciating detail to provide guidance to call originators. It can be expected that technology will likely find crevices in the regulatory interpretation to eke out further efficiencies, raising future questions requiring litigation as to whether the newest technological innovation falls with the "automatic" dialing limitation.

Noble contends that chasing a technological restriction in a statutory definition of an ATDS to achieve a policy goal is unlikely to be effective. The TCPA has not been effective in stopping illegal "robocalls" (as defined as calls playing pre-recorded messages). A called party receiving a call, where an agent is connected to the caller and speaking to the called party, is not concerned how that called was dialed. An individual receiving an unsolicited telemarketing call where a recorded announcement is played is not concerned how the call was dialed – they are aggravated by the purpose of the call and the recorded announcement. An unwanted telemarketing call that is received is unwanted, regardless of how that call was dialed. A scam call is unwanted, not because it is dialed automatically, but because it is a scam call.

Adopting "automatically" or "human intervention" is not supported in the statutory language, and introduces further ambiguity and promises to lead to years of further litigation to clarify the metes and bounds of such an interpretation. Further, because the statutory language is

visited 2/18/2020

clear, and purposefully directed to address dialer technology, there is no basis for introducing these further limitations.

V. *ACA INT'L* DID NOT ADDRESS WHETHER THE STATUTORY ATDS DEFINITION WAS AMBIGUOUS

The *Marks* decision cites portions of the *ACA Int'l* as supporting its position that the statutory language of an ATDS is ambiguous. That portion is replicated below:

> After struggling with the statutory language ourselves, we conclude that it is not susceptible to a straightforward interpretation based on the plain language alone. Rather, the statutory text is ambiguous on its face. The D.C. Circuit apparently agreed, stating that "[i]t might be permissible" for the FCC to adopt an interpretation that a device had to generate random or sequential numbers in order to be an ATDS, or that a device could be an ATDS if it was limited to dialing numbers from a stored list. *ACA Int'l*, 885 F.3d at 702–03. We therefore turn to other aids in statutory interpretation.[41]

The *Marks* court (along with others) has misinterpreted the context of the *ACA Int'l* and the logic applied. Firstly, the context of what the court in *ACA Int'l* stated is provided below:

> So which is it: does a device qualify as an ATDS only if it can generate random or sequential numbers to be dialed, or can it so qualify even if it lacks that capacity? The 2015 ruling, while speaking to the question in several ways, gives no clear answer (and in fact seems to give both answers). It might be permissible for the Commission to adopt either interpretation. But the Commission cannot, consistent with reasoned decisionmaking, espouse both competing interpretations in the same order. (*ACA Int'l* slip op. at 27.)

The court in *ACA Int'l* had to determine whether the FCC's 2015 Order was arbitrary or capricious. If so, then the Order would be set aside. One way to show an order is arbitrary is to show conflicting mandates in that order. The court in *ACA Int'l* was essentially stating that the Commission could define an ATDS one way, or another way, but not both ways at the same time in the order.

[41] *Marks*, at p. 20, internal footnotes omitted.

visited 2/18/2020

To illustrate this with a whimsical example, consider an agency regulation that interprets a statute's language by stating: a) widget cannot be present, but then states, b) a widget is required to be present. Without knowing the details of what a widget is, without knowing the statutory language, and without knowing whether the statute requires a widget to be present or not, a determination can be made that the regulation is arbitrary, because the agency "cannot, consistent with reasoned decisionmaking, espouse both competing interpretations in the same order."[42]

The court in *ACA Int'l* did not have to evaluate the correct functionality of an ATDS in order to reach the conclusion that the Commission's 2015 Order was arbitrary. The court merely noted that the Commission cannot espouse competing interpretations in the same order; doing so renders the order arbitrary or capricious. Returning to the whimsical widget example, a court could find that perhaps the statute does requires a widget to be present, or perhaps the statute requires the widget to be absent, but the statute cannot be interpreted as requiring both.

Thus, the statements by the court in *ACA Int'l* should not be interpreted as an evaluation that the statutory language in the TCPA was ambiguous. *ACA Int'l* did not address the issue of whether the statute was ambiguous and the Commission should not be swayed by the 9th Circuit logic that *ACA Int'l* supported the finding that the statutory definition is ambiguous.

VI. A CORRECTED VIEW OF THE RECORD OF THE COMMISSION'S AUTHORITY TO ADAPT TO NEW TECHNOLOGIES

The 9th Circuit provided dicta related the Commission's authority under the TCPA to adapt to technology changes. This statement has been used as an implied authorization that the Commission can adapt the TCPA language to evolving technology. The court stated:

> Further, the FCC thought that it was clear "that Congress anticipated that the FCC, under its TCPA rulemaking authority, might need to consider changes in technologies." *Id. [Referring to the 2003 Order]* Accordingly, the FCC concluded that an interpretation of the statutory definition of ATDS which excluded new technology that could automatically dial

[42] *Marks*, p. 13.

visited 2/18/2020

> thousands of numbers merely because it "relies on a given set of numbers would lead to an unintended result" and fail to effectuate the purpose of the statutory requirement. *Id.*[43]

The Commission's 2003 Order stated that "Congress anticipated that the FCC, under its TCPA rulemaking authority, might need to consider changes in technologies" and supported this assertion by citing two sources of authorities in the footnote:

> *See* 137 Cong. Rec. S18784 (1991) (statement of Sen. Hollings) ("The FCC is given the flexibility to consider what rules should apply to future technologies as well as existing technologies."). *See also Southern Co. v. FCC*, 293 F.3d 1338, 1346 (11th Cir. 2002) ("While the FCC is correct that the principle of nondiscrimination is the primary purpose of the 1996 Telecommunications Act, we must construe statutes in such a way to 'give effect, if possible, to every clause and word of a statute'.") (*quoting Williams v. Taylor*, 529 U.S. 362, 404 (2000) (internal quotation marks omitted)).[44]

First of all, the statement of Senator Hollings (a copy of which is attached) begins by emphasizing a provision in the proposed TCPA statue allowing the Commission to exempt certain technologies:

> Therefore, this bill includes a provision that allows those who use automated or prerecorded voice systems to apply to the FCC for an exemption from this prohibition. The bill gives the FCC the authority to exempt from these restrictions calls that are not made for a commercial purpose and categories of calls that the FCC finds do not invade privacy rights. If the FCC determines that such an exemption is warranted based on the record it develops, the FCC may grant such an exemption, subject to whatever conditions it determines to be appropriate.

Senator Hollings provides an example of such an innovative, yet-to-be-offered service:

> Some telephone companies are beginning to offer a voice messaging service which delivers personal messages to one or more persons. A person calling from a pay telephone at an airport, for instance, may call and leave a recorded message to be delivered later if the called line is busy or no one answers the call. Some debt collection agencies also use automated or prerecorded messages to notify consumers

[43] Marks, p. 11.
[44] FCC 2003 Order, footnote 436.

visited 2/18/2020

> of outstanding bills. The FCC should consider whether these types of prerecorded calls should be exempted and under what conditions such an exemption should be granted either as a noncommercial call or as a category of calls that does not invade the privacy rights of consumers.

Senator Hollings did not want such innovative services to be squelched from being offered to the public because they ran afoul of the TCPA. To avoid depriving the public of new technologies and services, Senator Hollings ensured that the TCPA allowed the FCC to exempt such new technologies. Thus, Senator Hollings stated:

> The FCC is given the authority to exempt certain types of calls, and the FCC is not limited to considering existing technologies. The FCC is given the flexibility to consider what rules should apply to future technologies as well as existing technologies.

To recap, Senator Hollings wanted to ensure that certain futuristic services could be exempted by the Commission if deemed appropriate. The provision that granted this authority to the FCC is found in the TCPA, Section (b)(1)(B) and (2)(B) which allows the FCC to exempt certain calls that play an artificial or prerecorded voice message to residential telephone lines. Senator Hollings was not granting any authority based on the statutory language to the Commission to evolve their regulatory authority based to encompass future technologies.

The citation to *Southern Co. v. FCC* (quoting *Williams v. Taylor*) merely supports that interpretation of a statute is "give effect, if possible, to every clause and word of a statute." Applying this does not in any way indicate the Commission has authority to modify the ATDS definition, but instead must apply the words in the statute.

There is no basis whatsoever to conclude that Congress intended, nor that the TCPA authorizes, the Commission to adapt or extend the statutory language of an ATDS in anticipation of the development of new technologies. The only authority granted to the Commission was to exempt new technologies. Using these citations as authorization to evolve the scope of the TCPA is, at least, a creative interpretation. A more accurate interpretation is that there was no intention to authorize the Commission to expand the scope of the TCPA to encompass new technologies.

visited 2/18/2020

This mischaracterization was identified in 2006 by *ACA International's Supplemental Submission to Petition for an Expedited Clarification and Declaratory Ruling*.[45] The Commission should acknowledge that the TCPA statute does not give it the authority to modify the TCPA statute, and that the definition of the ATDS is not ambiguous. The Commission is respectfully request to clarify the record of the above misconception, so that future briefs and rulings do not refer to this misrepresentation.

VII. CONCLUSION

The statutory language of the definition of an ATDS is not ambiguous. The scope of the ATDS definition explicitly addresses known dialer technology at that time that would indiscriminately call numbers that were both produced and/or stored in a file and then dialed. It is incorrect to presume that the statutory language is ambiguous because random or sequential number generators in digital devices could not store a number. Such devices were known in the art to store numbers, either in conjunction with their generation or in conjunction when copying the number to a file. In either case, the number would be dialed.

Without showing that the statutory language is ambiguous, the Commission should limit any forthcoming regulations to implementing the plain language of the statute. This means that equipment considered an ATDS must have the functions of 1) a random or sequential number generator to generate a telephone number and 2) the ability to dial that number. No further functions or requirements should be incorporated into the definition as there is no statutory basis for doing so.

Respectfully submitted on October 16, 2018

/Karl Koster/
Karl Koster,
Chief IP and Regulatory Counsel
Noble Systems Corporation
1200 Ashwood Parkway
Atlanta, GA 30338 (404) 851-1331 (x1397)

[45] Filed April 26, 2006, page 13, footnote 25.

visited 2/18/2020

APPENDICES

Attached are copies of:

- U.S. Patent 4,741,028
- U.S. Patent 4,188,510
- U.S. Patent 3,943,289
- U.S. Patent 4,922,520
- Statement of Senator Hollings

visited 2/18/2020

United States Patent [19]

Frimmel, Jr. et al.

[11] **Patent Number: 4,741,028**

[45] **Date of Patent: Apr. 26, 1988**

[54] **METHOD OF RANDOMIZING TELEPHONE NUMBERS**

[75] Inventors: **James J. Frimmel, Jr.**, Reston; **Alan R. Trefzger**, Sterling, both of Va.

[73] Assignee: **International Telesystems Corporation**, Herndon, Va.

[21] Appl. No.: **890,644**

[22] Filed: **Jul. 30, 1986**

[51] **Int. Cl.**[4] **H04M 1/27**

[52] **U.S. Cl.** **379/355**; 379/92

[58] **Field of Search** 379/67–69, 379/88–89, 92, 355–359, 209, 10, 11; 364/717

[56] **References Cited**

U.S. PATENT DOCUMENTS

3,703,727	11/1972	Knowlton	364/717 X
3,792,203	2/1974	Martin	379/357 X
3,943,289	3/1976	Sheldon et al.	379/69
4,121,830	10/1978	Buckley	364/717 X
4,201,896	5/1980	Bower et al.	379/67
4,438,296	3/1984	Smith	379/69

Primary Examiner—James L. Dwyer
Attorney, Agent, or Firm—James Creighton Wray

[57] **ABSTRACT**

Pseudorandom numbers are generated for telephone dialing in telephone call management systems by selecting a range of numbers to be dialed, successively randomly generating numbers within that range, comparing each randomly generated number as it is generated with numbers previously generated and recorded or called. When a new randomly generated number matches a previously generated number, a further number is generated and the compared. When no match is encountered, the new number is recorded or called. After recording or calling a predetermined amount of numbers within the range, remaining numbers to complete the range of numbers are selected sequentialy from an array of numbers. The final numbers are recorded or called in sequence, but the steps between the final numbers vary randomly according to the random generation of the numbers in the first part.

9 Claims, 1 Drawing Sheet

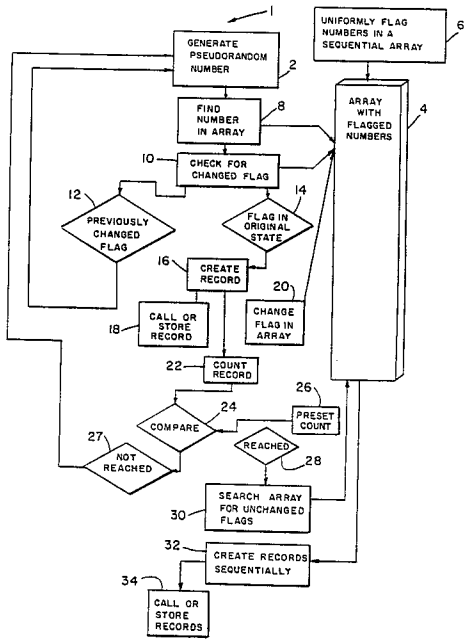

visited 2/18/2020

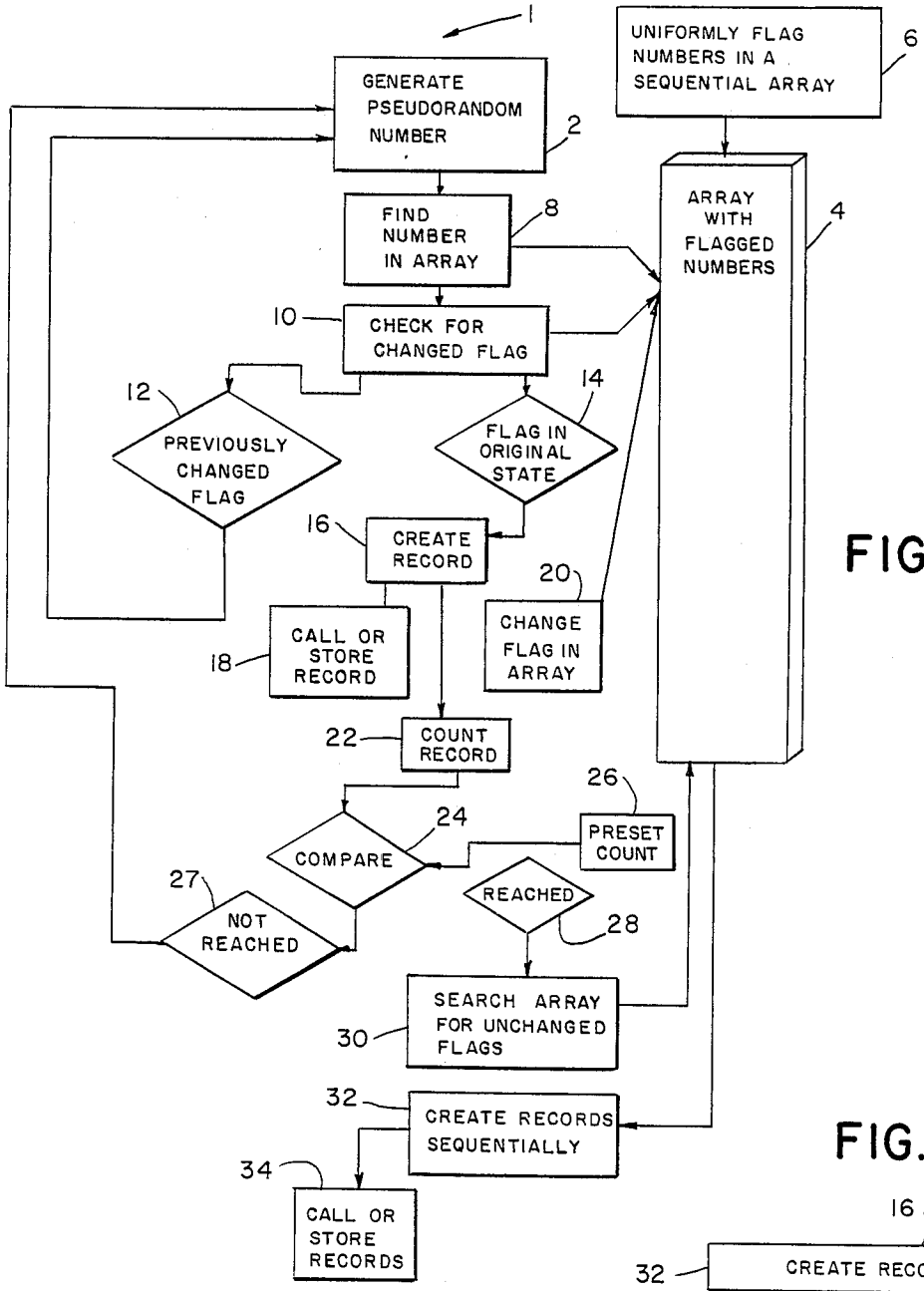

FIG. 1

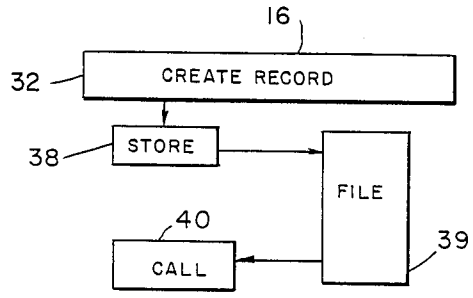

FIG. 3

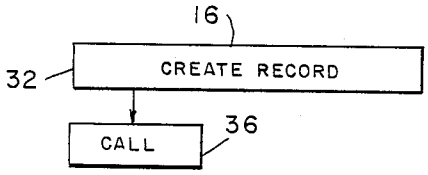

FIG. 2

visited 2/18/2020

METHOD OF RANDOMIZING TELEPHONE NUMBERS

BACKGROUND OF THE INVENTION

This invention relates to telephone call management systems and particularly to choosing numbers for dialing.

Telephone call management systems may dial sequential numbers in a particular telephone exchange. That creates a problem in that some of the number sequences may be assigned to the same subscriber. A system that sequentially dials numbers may successively dial a backup number in a single office.

To try to avoid that difficulty, a base number may be chosen and may be incremented by a fixed value, as each number is called in succession. The result is that all numbers may be called in a particular exchange. In large offices with more than 10 lines, for example, repeated calls may be directed to the same office. A problem exists in how to call numbers to ensure that all numbers are called within an exchange but to avoid calling numbers sequentially at a single location.

SUMMARY OF THE INVENTION

The present invention overcomes and avoids the problems of the prior art by generating random or pseudorandom numbers. First the range to be called is chosen. For example, in a three-digit exchange, 10,000 calls may be made to seven-digit telephone numbers within that exchange. The present system randomly selects the last four digits. The computer generates random or pseudorandom numbers and calls them. The system keeps track of what numbers have been called so far. Each new number selected is checked to see if it has been called previously. If that number has been called, another random number is chosen until an as-yet-uncalled number is reached. That avoids calling sequentially, which could result in ringing each phone in an office in succession.

The present system may be used by calling a number as soon as it is generated or by generating records for all numbers and then calling the numbers according to their position on the generated records. It is preferable to generate randomly as many numbers as reasonably possible, flagging numbers in an array as a new number is generated, and then to fill in the remaining numbers in sequence by checking the array for unflagged numbers for adding to records of the randomly generated numbers. For example, generating records for all numbers in an exchange requires generating 10,000 possible numbers. It is preferable to generate the first 90% of the 10,000 numbers with random generation and then to fill in the remaining numbers in sequence with numbers from an array which have been flagged to indicate that those numbers have not been randomly generated.

It is possible to generate a pseudorandom number by dividing a prime number by another prime number, for example 7, and by dividing the result again by that same number, e.g, 7. Each result may be used or the ensuing fraction may be used. Both exist in never-repeating patterns.

Pseudorandom numbers are generated for telephone dialing in telephone call management systems by selecting a range of numbers to be dialed, successively randomly generating numbers within that range, and comparing each randomly generated number as it is generated with flags in an array, which indicate numbers previously generated and recorded or called. When a new randomly generated number matches a previously generated number, a further number is generated and then compared. When no match is encountered, the new number is recorded or called. After recording or calling a predetermined amount of numbers within the range, remaining numbers to complete the range of numbers are selected by finding ungenerated or uncalled numbers in the array and adding numbers from the array to the generated or called numbers when no match is encountered. The final numbers are recorded or called in sequence, but the steps between the final numbers vary randomly according to the random generation of the numbers in the first part.

The preferred system creates the final group of records from numbers in the table in sequential order of the numbers.

The preferred system creates an array of sequential numbers and uniformly flags each number in an original condition, for example, with a binary one. A newly generated number is checked to see if the number in the table has its original flag, one. If so, the flag is changed to the generated number indicator, e.g., zero, and a record is created for that newly generated number. When, upon checking, a zero or other generated number indicator is found, the system simply generates another number and tries again. Finally, after a predetermined amount of new numbers have been successfully pseudorandomly generated, the system looks in the array for all flags still in their original condition. Records are created sequentially for numbers associated with those flags.

The present invention is a method of checking previously generated numbers against current ones.

The invention provides a means of indicating or remembering what numbers have been previously generated.

After recording or calling a predetermined amount of numbers within a selected range according to this invention, the remaining numbers to complete the range of numbers are selected by checking flags in an array indexed by the generated or called numbers and adding a number to the generated or called numbers based on that index into the array where a flag value denoting no previously generation is encountered. The final numbers are recorded or called in sequence, but the steps between the final numbers vary randomly according to the random generation of the numbers in the first part.

The present invention provides a telephone call management random dialing system. An array containing 10,000 flags or a range of flag elements is initialized so that all elements contain the value denoting no previous generation. A pseudorandom number is generated from arrays of possible numbers. The generated random number is used to index into an array of flags. A file record is created for the generated random number and the flag indexed by that number is set to a value indicating that the number has been generated. A further pseudorandom number is generated from a range of possible numbers. That further random generated number is checked for having been previously generated by checking the corresponding array flag. The array is indexed by the further number, and a further file record is created for the further number upon finding that the corresponding array element has the value denoting no previous generated. Other pseudorandom numbers are generated and checked to see whether flags by the other

visited 2/18/2020

random numbers have been changed in the array. The flags corresponding to those numbers are set to a value denoting generation, and file records are created for those numbers. At a time when less than a predetermined percentage of possible numbers have unchanged flags in the array, the array is checked for the elements still flagged as not previously generated. File records are generated or calls are made for those numbers. If records were generated, records are used to call after the generation of random records is complete.

The preferred method of generating sequential records of numbers to be called in a telephone call management system comprises selecting a three-digit exchange and randomly generating numbers selected from the last four digits of seven-digit telephone numbers in the exchange, generating a four-digit random number, and checking with a flagged array indexed by those random numbers to determine if a flag has been changed for the generated random number. If the flag corresponding to the generated random number is set to the value denoting previous generation, the invention generates another random number. If a flag is set to the value denoting no previous generation for the generated random number, the system changes the flag and creates a record with the generated random number. The system continues to generate random numbers and to check each random number as generated with flags by previously generated random numbers, generating another random number upon finding a flag value denoting previously generation and creating a record with the most recently generated random number and setting the corresponding flag upon finding a number not previously generated. The system counts the records created in sequence with the randomly generated numbers and, upon a predetermined count, creates records with previously non-generated numbers.

The preferred telephone call management number generating system chooses the range to be called, generates pseudorandom numbers, checks an array for previously generated numbers, checks each subsequently pseudorandomly generated number against the array of previously generated numbers using the number as the index into the array, sets the array element indexed by each number by the value denoting previous generation, calls each number not previously in the record, and generates another pseudoransom number upon finding that a generated pseudorandom number matches a previously generated number.

The preferred system then creates records from numbers not previously flagged or generated in the array in sequential order of the numbers.

In one modification of the invention, numbers are generated pseudorandomly in ten groups of one thousand each. The last three digits are randomized.

These and other and further objects and features of the invention are apparent in the disclosure which includes the specification with the above and ongoing description and claims and the drawings.

BRIEF DESCRIPTION OF THE DRAWINGS

FIG. **1** is a schematic flowchart for creating a record of generated numbers and comparing the generated numbers with flagged numbers in an array.

FIG. **2** is a schematic representation of calling numbers upon generations of each new number.

FIG. **3** is a schematic representation of calling numbers after a whole file has been generated.

DESCRIPTION OF THE INVENTION

The present invention provides a telephone call management random dialing system. A pseudorandom number is generated from 10,000 possible numbers. A file record is created for the generated random number. The generated random number is called or is stored in a file. A further pseudorandom number is generated from 10,000 possible numbers. That further random generated number is compared with earlier random numbers generated, called or stored and flagged in an array. A further file record is created for the further number upon finding no matches in the array. The further number is called or is stored in the file. Other pseudorandom numbers are generated and checked to see whether the other random numbers have been generated. At a time when a predetermined percentage or less of possible numbers remains ungenerated, an array is checked for the ungenerated numbers, and a file is filled with the heretofore ungenerated numbers which are called in numerical sequence. When calls are not made immediately upon generating numbers, file records are generated for those numbers and the numbers are dialed after randomizing part of or the entire exchange.

The preferred method of generating numbers to be called in a telephone call management system comprises selecting a three-digit exchange and randomly generating numbers selected from the last four digits of seven-digit telephone numbers in the exchange. Generated four-digit random numbers are checked with an array which indicates previously generated random numbers to determine if a record exists for each newly generated random number. If an indication does exist for that generated random number, the invention generates another random number. If a record does not exist for the generated random number, a record is created with the generated random number. The system continues to generate random numbers in sequence and checks each random number as generated with records of previous random numbers, generating another random number upon a record match and creating a record with the most recently generated random number upon no match. The system counts the records created with the randomly generated numbers and, upon a predetermined count, creates further records in numerical sequence with previously non-generated numbers.

The preferred telephone call management number generating system chooses the range to be called, generates pseudorandom numbers, calls the pseudorandom numbers in the order generated, makes a record of previously generated called numbers, checks each subsequently pseudorandomly generated number with records of previously generated called numbers, calls each number not previously shown in the record, makes a new record for the called number, and generates another pseudorandom number upon finding that a generated pseudorandom number matches a previously generated number.

The preferred system further counts the generated and called numbers, checks a sequential table of numbers for numbers previously generated and calls and creates a record upon finding a number in the table which has not been generated for calling.

DETAILED DESCRIPTION OF THE DRAWINGS

A system for randomly generating telephone numbers is generally referred to by numeral **1** in FIG. **1**. In

visited 2/18/2020

the first step, any number, for example, a four-digit number is generated pseudorandomly **2**. That number generated in step **2** is checked with previously generated and flagged numbers. For example, an array **4** of previously uniformly flagged **6** sequential numbers is checked **8** with the new number. If a match is found, for example, if a changed flag is found **12**, a new number is generated **2**. The new number is checked **10** with previously generated numbers. If no match, e.g., an unchanged flag is found **14**, a record **16** is created and called or stored **18**. The system continues to generate **2** numbers and to check **10** the numbers with previously stored records **4**. Upon finding that a number has been previously generated, a new number is generated **2**. If the number has not been generated previously **14**, a new record **16** is created and the flag in the array **4** is changed **20**. The number of records is counted **22**. If comparison **24** shows that the predetermined count **26** has not been reached **27**, a new number is generated **2**. When the predetermined count **26** is reached **28**, the last numbers are generated sequentially by searching **30** through the array **4**. When an unchanged flag is found, a new record is written **32**. The array **4** is provided with all numbers in the selected range. As a record **16** is created, that number is found in array **4** and the flag is changed **20** by that number in array **4**. After the predetermined count is reached **28**, remaining numbers of array **4** are written **32** and called or stored **34**.

As shown in FIG. **2**, records created in Steps **16** and **32** are concurrently used in a DTMF tone generator to place a call **36**. Alternately, as shown in FIG. **3**, the records created in steps **16** and **32** may be added **38** to file **39** and subsequently called **40**. In one embodiment of the invention, after creation of 9,000 records of pseudorandom generated numbers, the final 10% or 1000 numbers are created in sequence.

The flagging and changing of the flagging may be accomplished, for example, by adding or changing a binary character adjacent the number.

While the invention has been described with reference to specific embodiments, modifications and variations may be made without departing from the scope of the invention which is defined in the following claims.

We claim:

1. The telephone call management random dialing method comprising generating a pseudorandom number from a range of possible numbers stored in an array, creating a record for the generated number and flagging the number in the array, generating a further pseudorandom number from the range of numbers, comparing that further generated number with earlier generated numbers and generating a further record for the further number upon finding that the number has not previously been generated and flagging the further number in the array, generating other pseudorandom numbers, checking to see whether the other numbers have been previously generated and creating file records in sequence for those other numbers that have not previously been generated and flagging the other numbers in the array, upon a time when less than a predetermined percentage of possible numbers in the range remain ungenerated, checking the array for the ungenerated numbers in numerical sequence and generating the heretofore ungenerated numbers in numerical sequence, generating file records for those last mentioned numbers and dialing the last mentioned numbers.

2. The method of generating sequential records of numbers to be called in a telephone call management system comprising selecting a three-digit exchange and randomly generating numbers selected from the last four digits of the seven-digit telephone numbers in the exchange, after generating a four-digit random number, checking with an array indicating previously generated numbers to determine if a previous generation indication exists for the generated random number, if an indication does exist for the generated random number, generating another random number, if an indication does not exist for the generated random number, creating a record with the generated random number, making an indication in the array, continuing to generate random numbers and checking each other random number as generated with indications of previously generated random numbers, generating another random number upon finding an indication and creating a record with the most recently generated random number upon finding no indication and changing that indication in the array, counting the records created and, upon a predetermined count, creating records with previously nongenerated numbers.

3. The telephone call management number generating method comprising choosing the range of numbers to be called, generating pseudorandom numbers within the range, calling the pseudo-random numbers in the order generated, marking previously generated called numbers, checking each subsequently pseudo-random generated number with previously generated and called numbers, calling each number not previously called, generating another pseudo-random number upon finding that a subsequently generated pseudo-random number matches a previously generated and called number.

4. The system of claim **3** further comprising counting the generated and called numbers, subsequently checking an array of numbers with markings by numbers previously generated and called and creating a record upon finding a number in the array which has not been generated and called until reaching a predetermined count.

5. The method of claim **3** further comprising stopping the pseudorandom generating after a predetermined percentage of the range of numbers has been called.

6. The method of claim **5** further comprising completing the range of numbers by calling and creating records from ungenerated numbers in an array in sequential order of the numbers.

7. The telephone call management method with random number generation comprising making an array of all numbers in numerical sequence in a range of numbers to be called, uniformly flagging numbers in the array, generating a first pseudorandom number, finding the first generated number in the array, checking a flag by that number in the array, if the flag has been changed, generating a new number, if the flag in the array by the first generated number has not been changed, creating a record of the first generated number and changing the flag in the array by the first generated number, using the created record for making a telephone call, generating a second pseudorandom number, finding the second generated number in the array, checking the flag by the second generated number in the array, if the flag has been changed generating a new number, if the flag has not been changed, changing the flag in the array by the second generated number and creating a record of the second generated number, using that second generated number for making a telephone call, generating an nth pseudorandom number wherein n is a whole number greater than two and less than the number of numbers in

visited 2/18/2020

the range of numbers, finding the n number in the array, checking the flag in the array by the n number, generating a further number if the flag has been changed, if the flag is in its original state creating a record of the n number and changing the flag by the n number in the array, using the record of the n number to make a telephone call, continuing the generating of pseudorandom numbers, the finding of the generated numbers in the array, the checking of flags in the array by the generated numbers and the creating records and changing flags in the array and using the records to place telephone calls, counting records, comparing the record count with a preset count, if the preset count has not been reached, continuing to generate pseudorandom numbers to find numbers in the array to check the numbers to create records and change flags and use the numbers, if the preset count has been reached, searching the array in numerical sequence for unchanged flags and creating records in numerical sequence of numbers in the array by flags which remain unchanged, and using the records to make telephone calls.

8. The method of claim **7** wherein the using steps comprise making telephone calls when the records are created.

9. The method of claim **7** wherein the using steps comprise storing records in sequence as the records are created for later use in making telephone calls.

* * * * *

visited 2/18/2020

United States Patent [19]

Bower et al.

[11] **4,188,510**

[45] **Feb. 12, 1980**

[54] **TELEPHONE SEQUENTIAL NUMBER DIALER WITH NUMBER INCREMENTING**

[75] Inventors: **David S. Bower**, Sunrise; **Fred J. Smith**, Plantation, both of Fla.

[73] Assignee: **Digital Products Corporation**, Fort Lauderdale, Fla.

[21] Appl. No.: **921,561**

[22] Filed: **Jul. 3, 1978**

Related U.S. Application Data

[62] Division of Ser. No. 799,141, May 23, 1977.

[51] **Int. Cl.**[2] **H04M 1/27**

[52] **U.S. Cl.** ..... **179/90 BD**; 179/6 D

[58] **Field of Search** ..... 179/90 B, 90 BB, 90 BD, 179/5 P, 6 D

[56] **References Cited**

U.S. PATENT DOCUMENTS

3,479,654	11/1969	Bobeck et al.	179/90 BB
3,482,058	12/1969	Guennou	179/90 BB
3,718,771	2/1973	Bank	179/90 B
3,812,296	5/1974	Paraskevakos	179/90 B
3,882,284	5/1975	Munday	179/90 B
3,943,289	3/1976	Sheldon et al.	179/6 D

OTHER PUBLICATIONS

Palmer, Automatic Telephone Dialer, IBM Tech. Disc. Bulletin, vol. 14, No. 12, 5/72, p. 3821.

Primary Examiner—Raymond F. Cardillo, Jr.
Attorney, Agent, or Firm—Lerner, David, Littenberg & Samuel

[57] **ABSTRACT**

A telephone sequential dialer features a shift register which has a number of bit positions which are one more than the maximum number of digits to be dialed. A plurality of consecutive ONES starting at the leading edge of the shift register are inserted into it, the number of ONES inserted being equal to the difference between the number of shift register bit positions and the number of digits of the telephone number to be called. The digits of the telephone number to be called are inserted into a counter whenever a ONE is detected in the shift register by a scanning means, and a dial pulse is generated whenever the counter is decremented. The dial pulses are no longer generated when the counter reaches zero.

5 Claims, 8 Drawing Figures

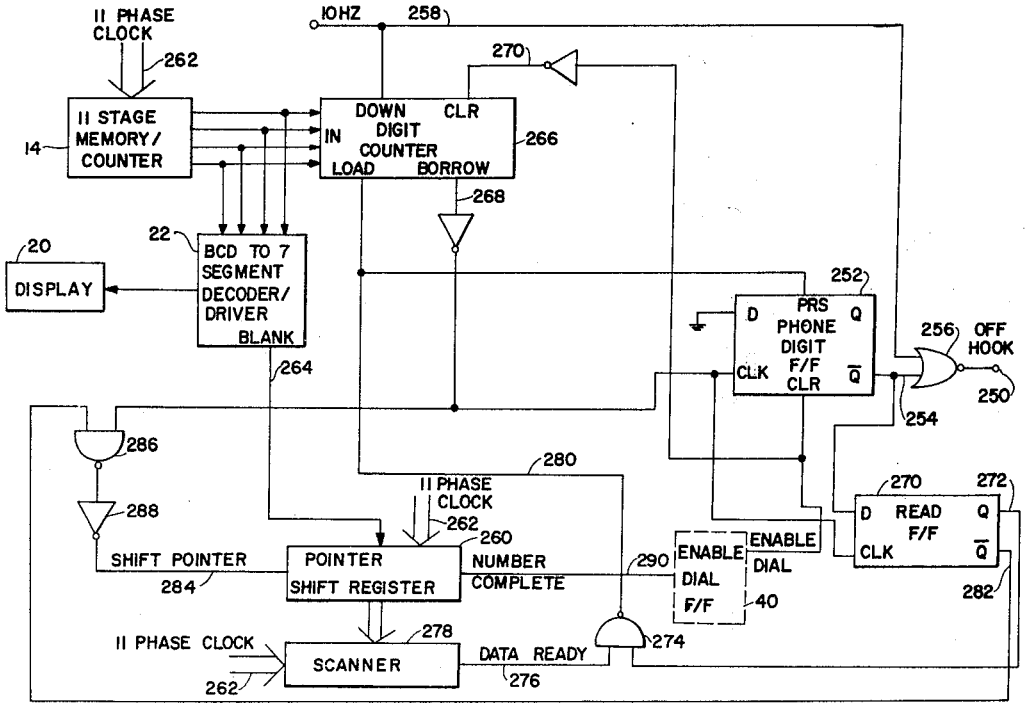

visited 2/18/2020

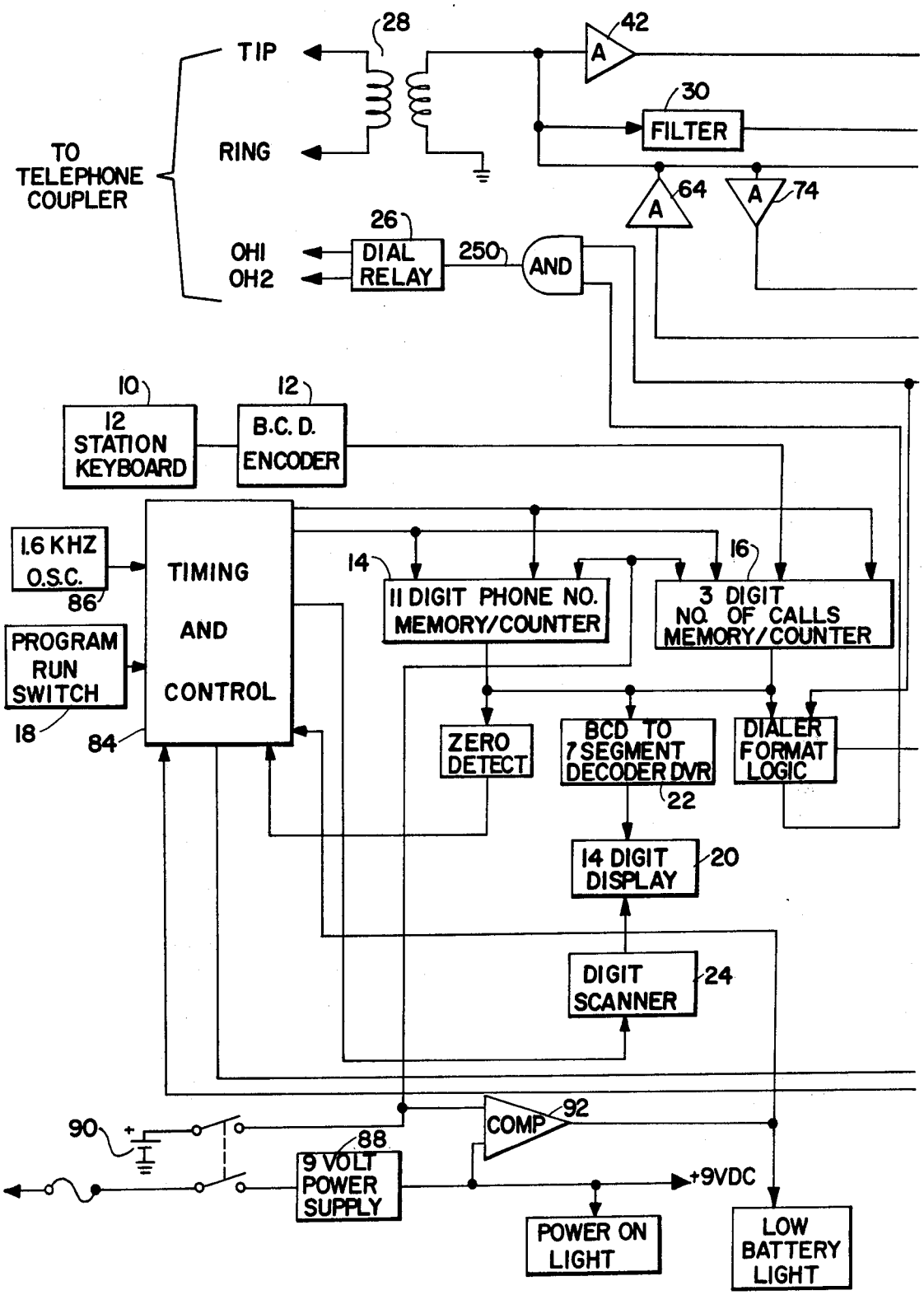

FIG. 1A

visited 2/18/2020

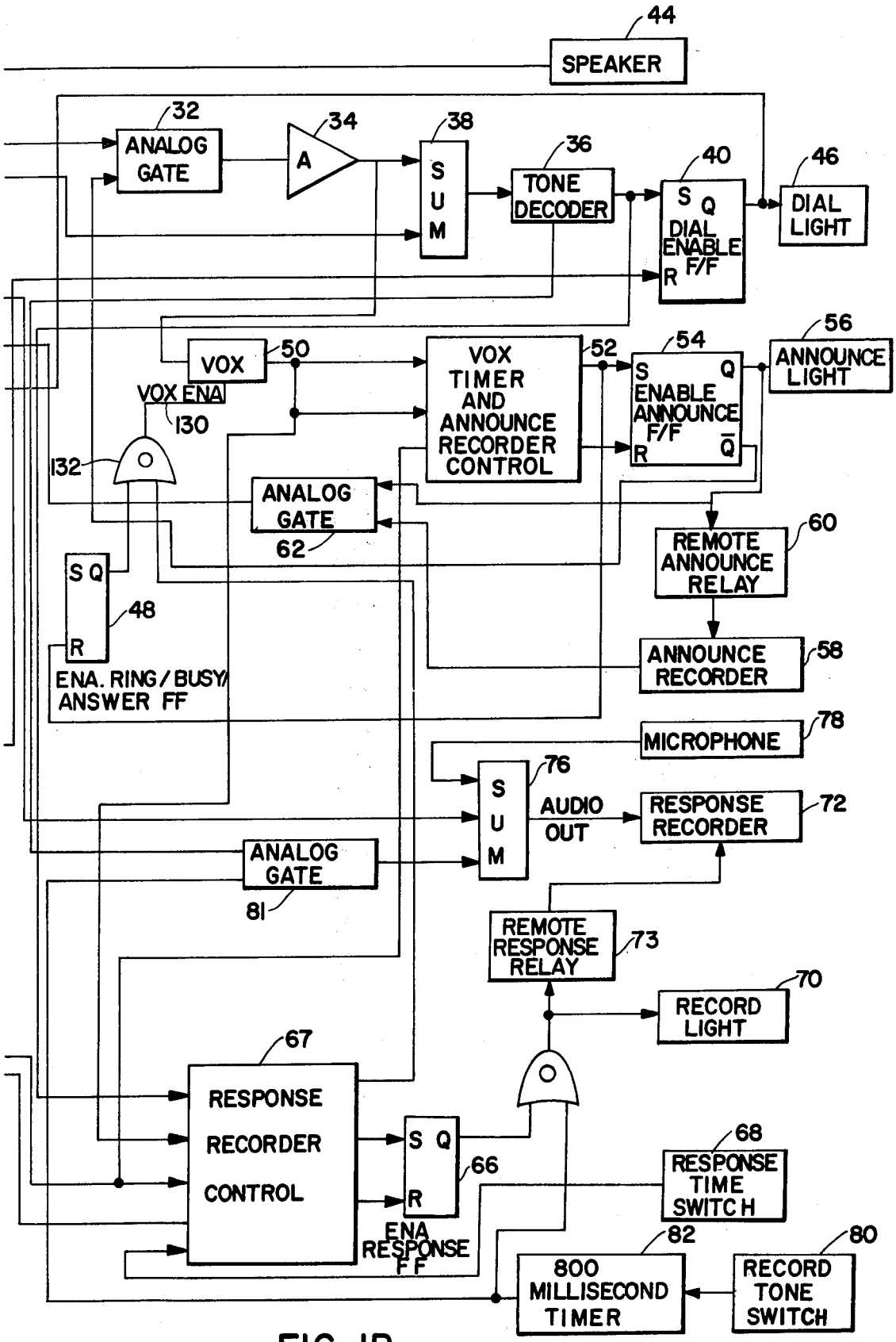

FIG. 1B

visited 2/18/2020

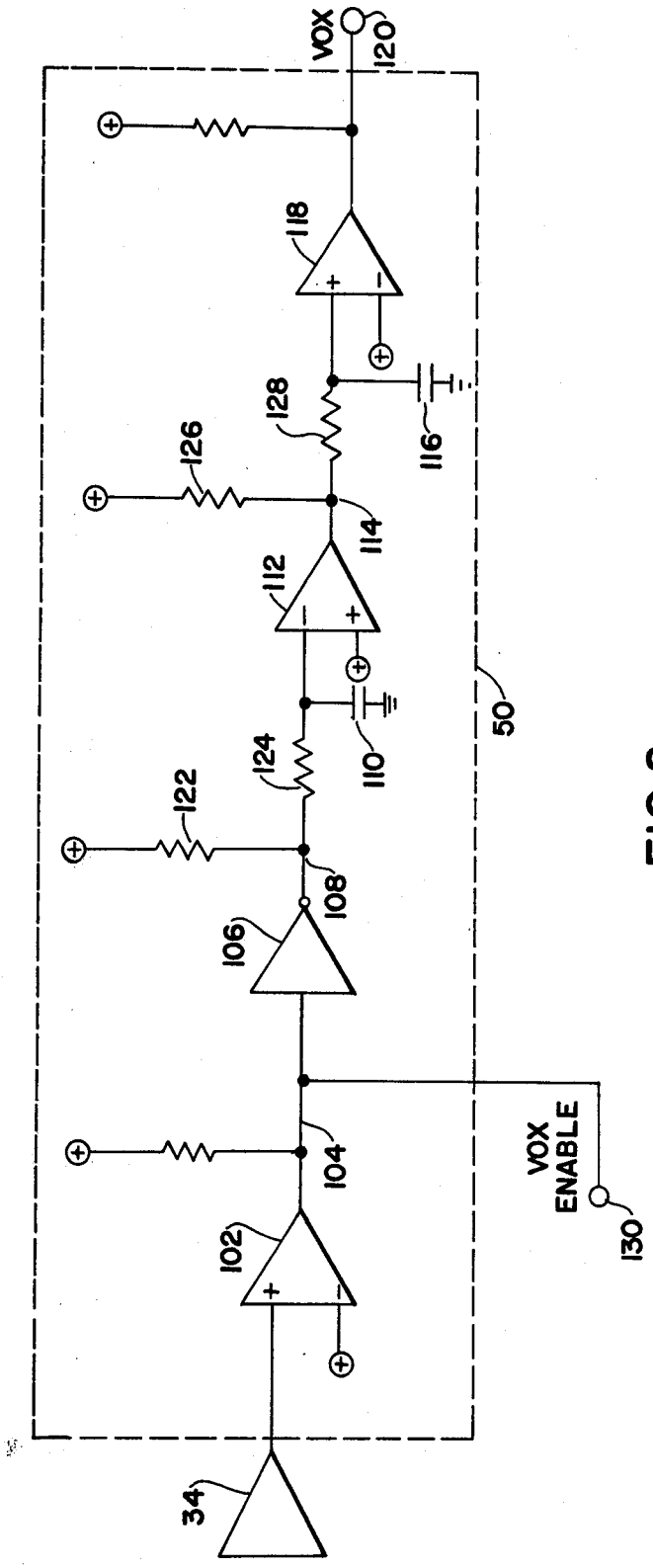

FIG. 2

visited 2/18/2020

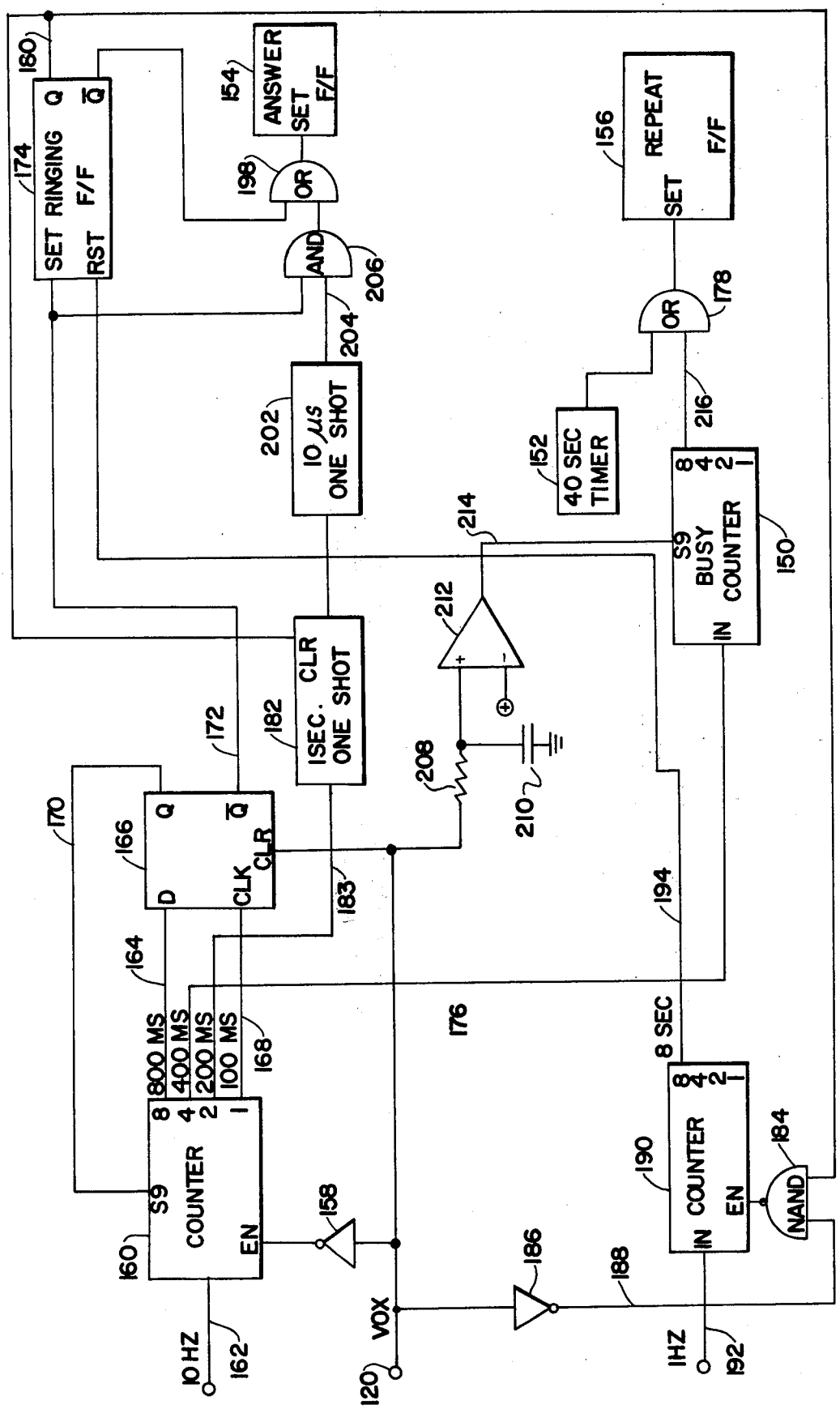

FIG. 3

visited 2/18/2020

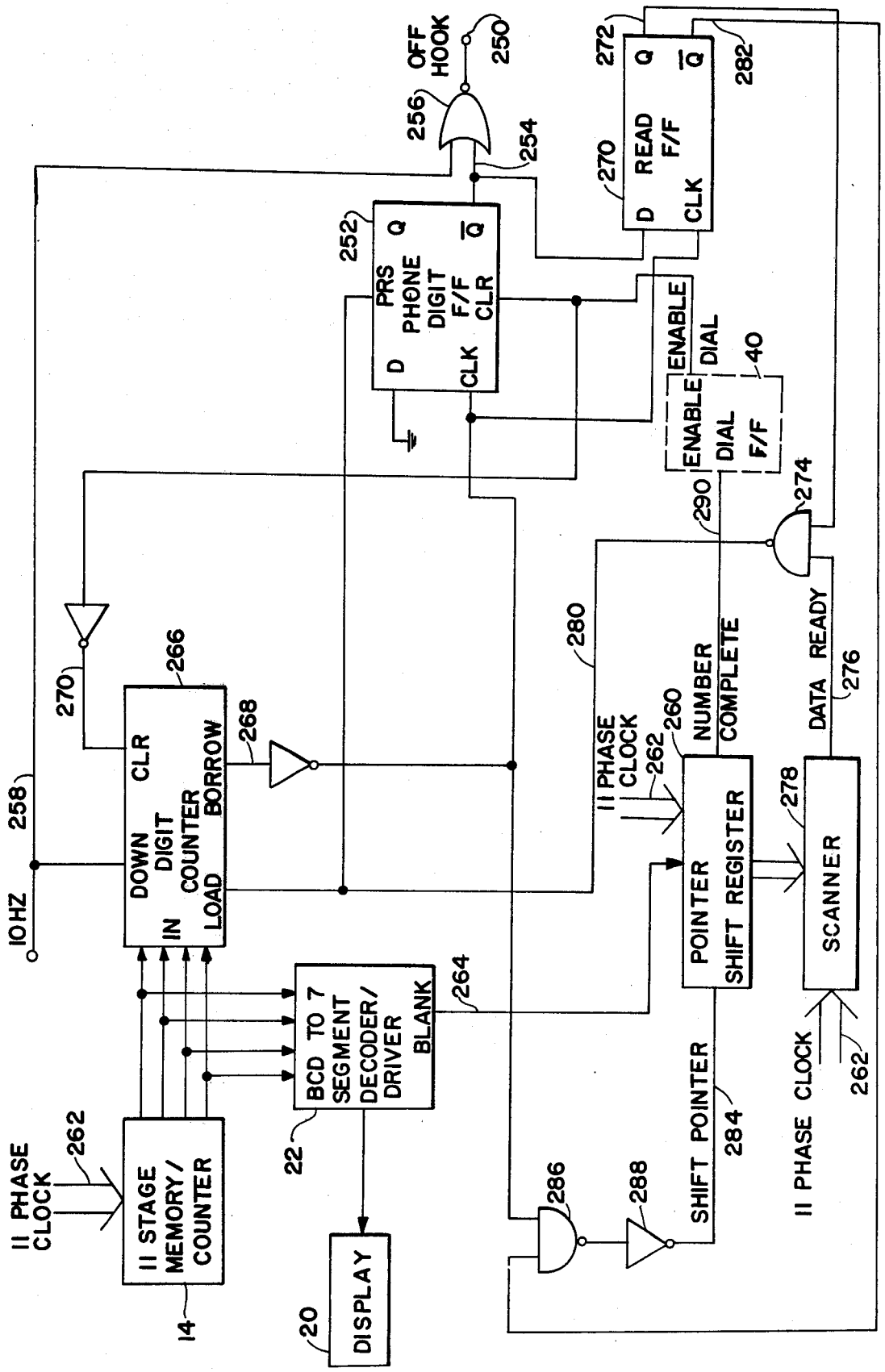

FIG. 4

visited 2/18/2020

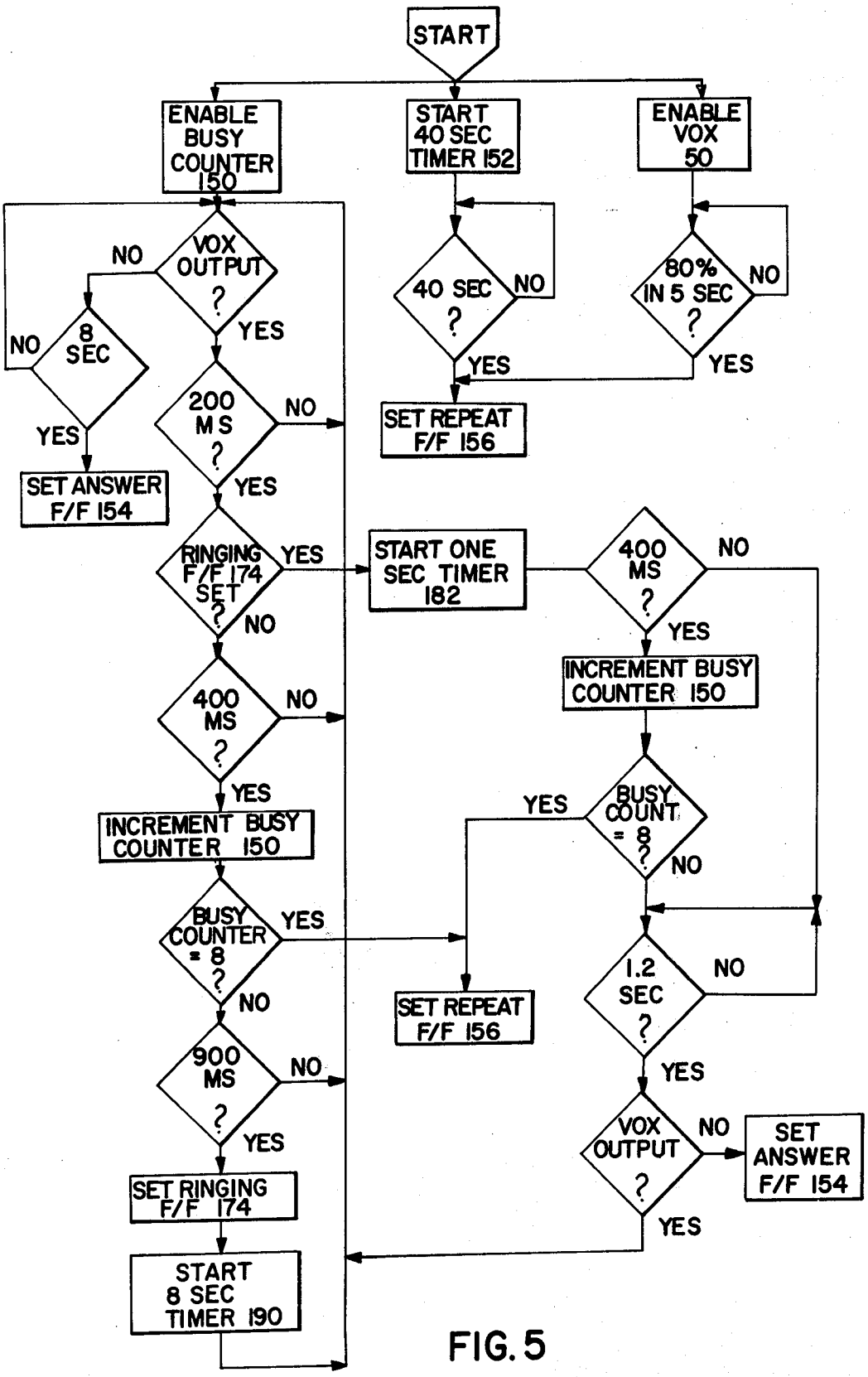

FIG. 5

visited 2/18/2020

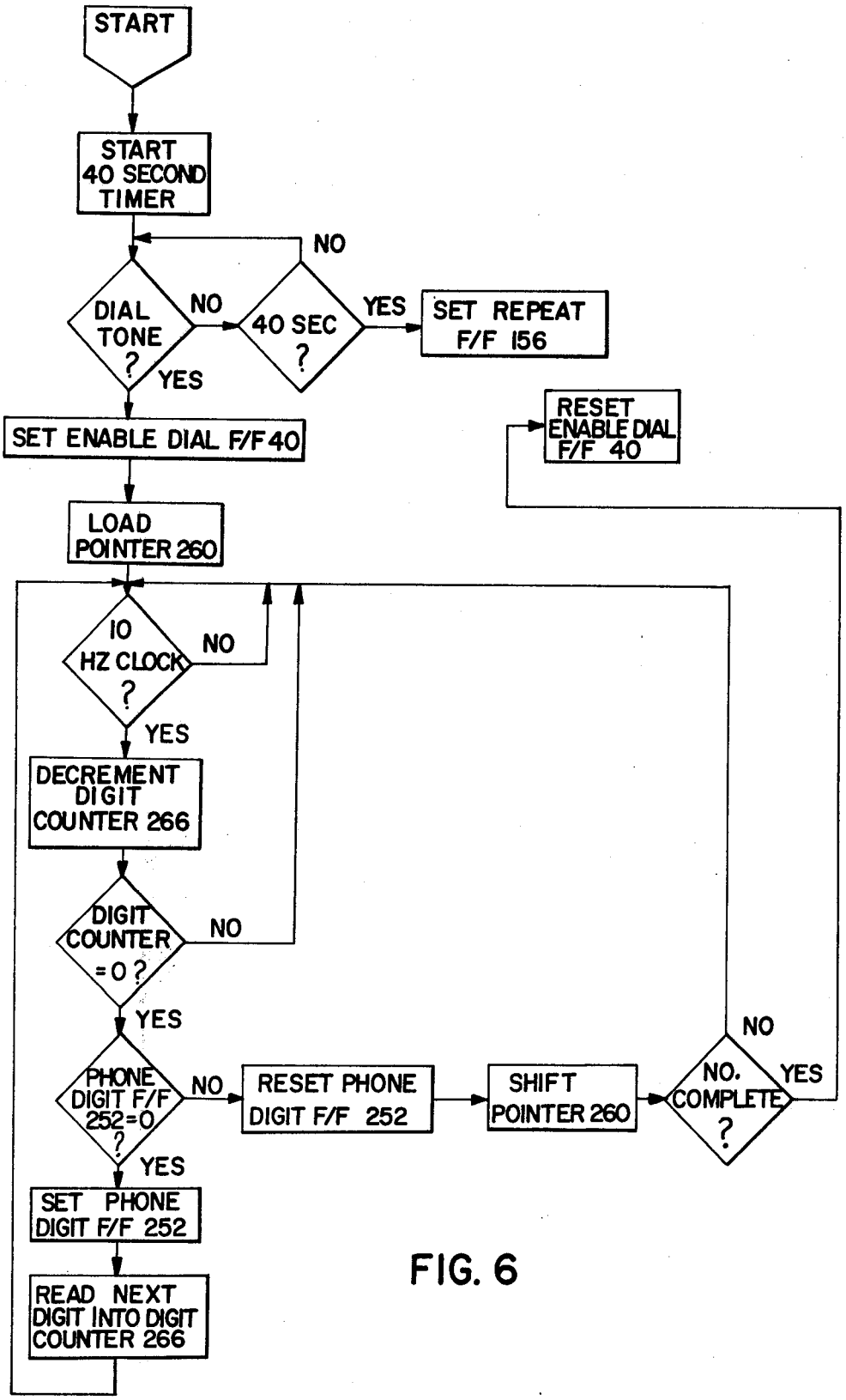

FIG. 6

visited 2/18/2020

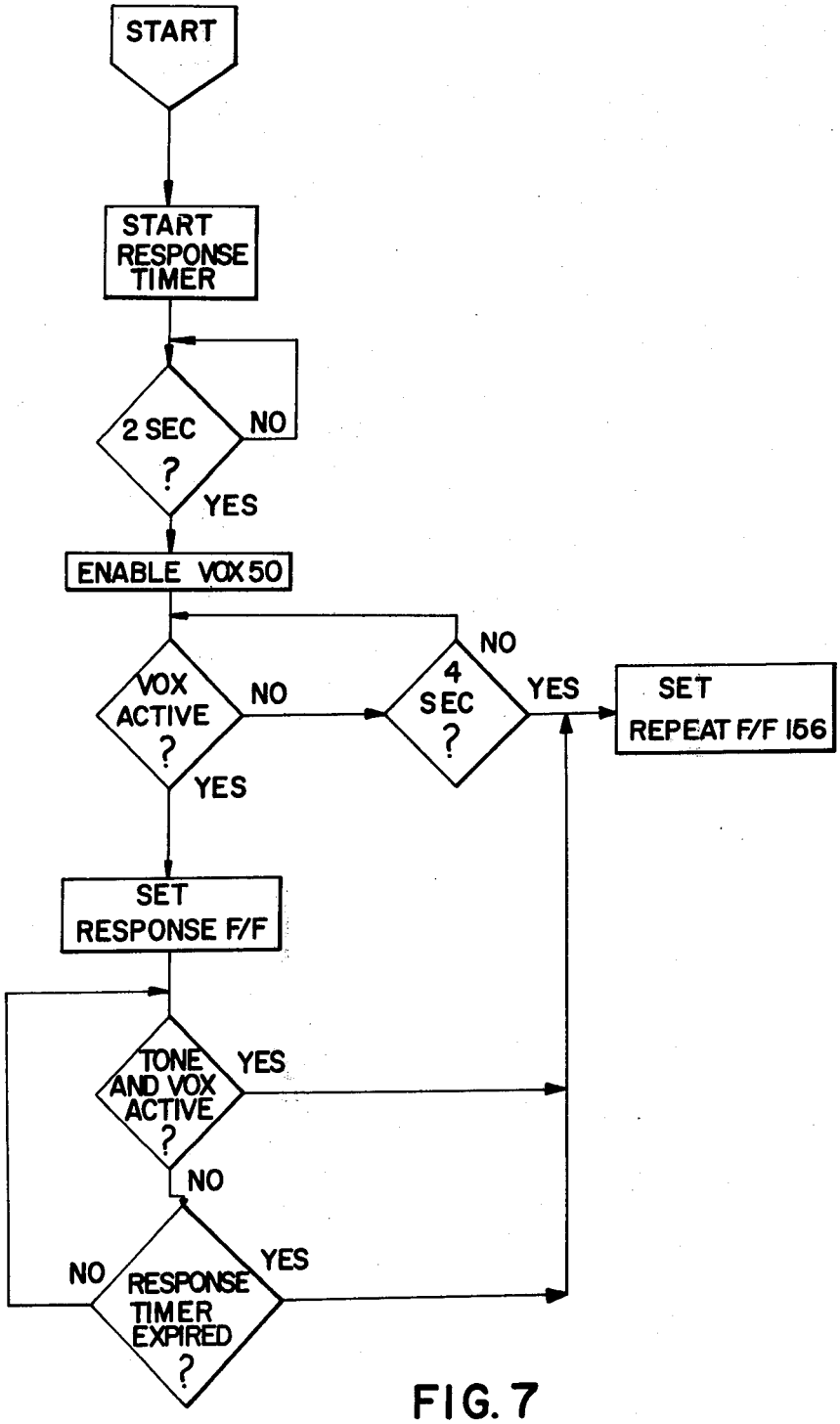

FIG. 7

visited 2/18/2020

TELEPHONE SEQUENTIAL NUMBER DIALER WITH NUMBER INCREMENTING

This is a division of application Ser. No. 799,141, filed May 23, 1977.

BACKGROUND OF THE INVENTION

This invention relates to message announcement and response recording systems, and, more particularly, to telephone polling apparatus for supplying a prerecorded message to a plurality of telephone subscriber stations in sequence and recording responses from the stations after supplying the message thereto.

Telephone polling has, in recent years, gained popularity as a means for reaching a large number of people on an individual, personalized basis, in order to deliver a message, such as a commercial advertisement or a sales solicitation. Typically, in the past, such polling has been achieved by utilizing manual dialing and message delivery, which is relatively expensive. Additionally, this manual method of polling is susceptible to human dialing error, resulting in either wrong numbers being dialed or the same number being dialed more than once.

To overcome certain of the disadvantages of a manual polling arrangement, different systems have been devised to effect the automatic sequential dialing and announcement function. For example, U.S. Pat. No. 3,943,289 discloses apparatus wherein a prerecorded message is supplied to a plurality of telephone subscriber numbers automatically called in sequence from a local station. Upon placing the call to the first number, another second number is established by changing the first called number by a predetermined increment. In response to the first called number being reached, the prerecorded message is coupled to a telephone line at the local station. In response to the call being either completed or the elapse of a predetermined time during which it is expected that the called subscriber should answer the telephone, a termination signal is derived to indicate that operations for the first party have been terminated. In response to the termination signal, the telephone is repeatedly hung up and picked up automatically until the prerecorded message has been completed and a dial tone has been detected, at which time the second number is called. The device is activated repeatedly in this manner.

However, the apparatus disclosed in the aforementioned patent suffers from a number of disadvantages. For example, no response recording capability is disclosed, although it is mentioned that such can be provided. Such response recording capability is advantageous when making a sales solicitation because the called party can be requested to supply his name and telephone number, or address, for future follow-up by a sales person. Additionally, it would be desirable to have response recording capability wherein the response time is selectively adjustable dependent upon the type of information it is desired to record during the response. A further disadvantage of the apparatus disclosed in the patent is that the disclosed apparatus will deliver a message even if the called number is answered by a telephone answering device which delivers a recorded message. This is an obvious undesirable attribute.

It is therefore an object of the present invention to provide apparatus for supplying a prerecorded message to a plurality of telephone subscriber stations in sequence and recording responses from the stations after supplying the message thereto.

It is another object of the present invention to provide such apparatus wherein the response recording time is selectively adjustable.

It is a further object of the present invention to provide such apparatus which, after placing the call, can discriminate between a busy condition, an answer condition, a recorded announcement condition, and a no answer condition, on the telephone line, so that message delivery is only effected upon discrimination of an answer condition.

It is still another object of the present invention to provide such apparatus wherein the number of calls to be made and the initial phone number to be called may be readily programmed into the apparatus.

It is still a further object of the present invention to provide such apparatus wherein the phone number being called and the number of calls still to be made are displayed.

It is yet another object of the present invention to provide such apparatus wherein message delivery and response recording may be monitored by an operator.

It is yet a further object of the present invention to provide such apparatus wherein the present activity of the apparatus, such as dialing, message delivery, etc., is displayed.

SUMMARY OF THE INVENTION

The foregoing and additional objects are attained in accordance with the principles of this invention by providing apparatus for supplying a prerecorded message to a telephone line. The apparatus comprises dialing means responsive to a start signal for providing dial signals indicative of a telephone number to said telephone line and a number complete signal upon completion of said providing; means rendered effective by said number complete signal and responsive to energy on said telephone line for providing a first signal in response to an energy condition on said telephone line indicative of an answer condition and providing a second signal in response to an energy condition on said telephone line indicative of a condition other than said answer condition; means responsive to said first signal for transmitting said prerecorded message over said telephone line; means responsive to the end of said prerecorded message for generating said second signal; and means responsive to said second signal for providing said start signal.

In accordance with an aspect of this invention, the apparatus includes means for storing the telephone number to be called and means responsive to the number complete signal for incrementing the stored telephone number by a predetermined number.

In accordance with another aspect of this invention, the apparatus includes means responsive to the end of the message for coupling a recording medium to the telephone line and means responsive to the end of the message for timing a predetermined interval and generating said second signal at the termination of the predetermined timed interval.

In accordance with yet another aspect of this invention, the apparatus includes means for selectively adjusting the predetermined interval so as to provide response recording time adjustment.

In accordance with a further aspect of this invention, the apparatus includes means whereby the message

visited 2/18/2020

announcement and response recording may be monitored by an operator.

In accordance with still another aspect of this invention, the initial phone number to be called and the number of calls to be made are readily programmed into the apparatus.

In accordance with yet a further aspect of this invention, there is provided a visual display showing the phone number being called, the number of calls still to be made and the present activity of the apparatus.

DESCRIPTION OF THE DRAWING

The foregoing will be more readily apparent upon reading the following description in conjunction with the drawing in which:

FIG. **1**, which comprises FIGS. **1A** and **1B** with FIG. **1A** placed to the left of FIG. **1B**, depicts a functional block schematic diagram of apparatus constructed in accordance with the principles of this invention;

FIG. **2** depicts a schematic diagram of circuitry for detecting energy on the telephone line and providing an output signal upon detection of such energy;

FIG. **3** depicts a functional block schematic diagram of discrimination circuitry for timing the energy detection of the circuitry of FIG. **2** and discriminating between different conditions on the telephone line;

FIG. **4** depicts a functional block schematic diagram of circuitry for generating dial pulses to dial a telephone number;

FIG. **5** depicts a flow chart for the circuitry shown in FIG. **3** showing the algorithm for discriminating between different conditions on the telephone line;

FIG. **6** depicts a flow chart which will be helpful in understanding the functioning of the circuitry of FIG. **4** for dialing a telephone number; and

FIG. **7** depicts a flow chart for the apparatus of FIG. **1** depicting the steps in recording a response.

DESCRIPTION OF THE PREFERRED EMBODIMENT

Referring now to FIG. **1**, depicted therein is an overall block schematic diagram of apparatus constructed in accordance with the principles of this invention which functions to supply a prerecorded message to a plurality of telephone subscriber stations in sequence and subsequently record responses from the stations after supplying the message thereto. The apparatus shown in FIG. **1** is coupled to a telephone line through a telephone operating company supplied coupler. The apparatus includes a control panel containing a keyboard and display. The keyboard is utilized to program the apparatus by keying in the initial phone number to be called and the number of calls to be made. The display is for displaying the telephone number being called, the number of calls to be made, and also includes indicators for displaying the system status, such as whether the apparatus is in the dial mode, the message delivery mode, the response recording mode, plus indicators as to the condition of the power supply. The control panel also includes control switches which will be described in more detail hereinafter.

The apparatus shown in FIG. **1** also includes an announcement recorder which contains the prerecorded message on an endless loop tape and a response recorder which is illustratively a tape cassette recorder into which blank recording tape cassettes are inserted.

The initial phone number to be called is entered by an operator via the 12-station keyboard **10**. The keyboard data is encoded into a BCD format by encoder **12** and stored in 11-digit memory/counter **14**. The number of digits required is dependent on the type of call: i.e., local, local long distance, and long distance. A 3-digit memory/counter register **16** is provided to store the number of calls to be made. Phone numbers, or the number of calls, are programmed by first depressing the * button or # button on the keyboard respectively, with Program/Run switch **18** in the Program position.

Programmed information is shown by a 14-digit display **20**. Displayed data is controlled by a BCD to 7 segment decoder driver **22** and digit scanner **24**. Once the initial data is entered and visually checked, the Program/Run switch **18** is set to Run.

The telephone is electronically taken off hook by operating dial relay **26** to close the OH1 and OH2 contacts connected to the coupler. The dial tone appearing across the tip and ring connection of the audio transformer **28** is coupled to filter **30** and analog gate **32**. Dial tones are passed by gate **32**, amplified by amplifier **34**, and presented to tone decoder **36** via a summing network **38**. In response to the 440 Hz dial tone signal, tone decoder **36** provides a signal to set dial enable flipflop **40**. If no tone appeared within 40 seconds, the phone is placed back on hook for a period of eight seconds before a new attempt is made.

All signals appearing on the telephone line are also presented to power amplifier **42** which drives speaker **44**. This allows an operator to monitor events as desired. Once set, enable dial flipflop **40** turns on dial light **46** and enables encoded dial data to be presented to dial relay **26**. Numbers are dialed by opening and closing the OH1 and OH2 contacts. When the dialed number is completed, enable dial flipflop **40** is reset and enable ring/busy/answer flipflop **48** is set, and dial light **46** is extinguished.

Detection of rings, busy signals or answers is accomplished by timing a voice activated device (VOX) **50**. Conventional methods of ring and busy detection through use of tone decoders presents problems due to inconsistencies between local telephone companies with respect to signalling frequencies. Ring and busy frequencies vary from exchange to exchange with no nationwide standard expected until the year 2000.

VOX **50** and associated timer **52** together form a timed energy detector. Logic is provided to discriminate between ring and busy signals. Once the phone is answered, additional discrimination is provided to determine if the answering party is a legitimate subscriber or recorded announcement.

In the event that the call is not answered, the line is busy, or a recorded announcement is on the line, the phone is hung up, phone number counter **14** is incremented by a fixed number, illustratively **10**, and number of calls counter **16** decremented by one.

Detection of a valid answer sets enable announce flipflop **54** and clears enable ring/busy/answer flipflop **48**. Announce light **56** is illuminated. Concurrently, announcement recorder **58** is turned on by remote announce relay **60**.

The recorded announcement is passed by analog gate **62**, amplified by amplifier **64**, and presented to the phone line. A tone at the same frequency as the dial tone signals the called party that the announcement is completed. This same tone is presented to tone decoder **36** via summing network **38**. Detection of the tone resets enable announce flipflop **54** and conditionally sets enable response flipflop **66**. Useage of a tone permits vari-

visited 2/18/2020

able length announcements within the time limits of endless loop tapes.

Enable response flipflop **66** will be set by response recorder control **67** provided that response time switch **68** is not set to zero. In this event, the logic is cleared to its starting condition and the next number is processed. Once enable response flipflop **66** is set, record light **70** is illuminated and response recorder **72** turned on through relay **73**. Signals from the phone line are amplified by amplifier **74** and presented to recorder **72** via summing network **76**. If no signals are detected, or if a dial tone is detected within a 4-second interval, enable response flipflop **66** is reset, signalling the start of a new cycle.

If the called party continues to respond, the recorder **72** will remain on for the duration of the response time setting. A new cycle is then initiated.

The announcement tape is programmed by inserting the endless loop tape into response recorder **72**, and placing the unit in the program mode of operation. Signals from microphone **78** are presented to recorder **72** via summing network **76**. Depressing record tone switch **80** gates a 440 Hz signal to the recorder from tone decoder **36** through gate **81** for a duration of 800 milliseconds, as determined by timer **82**.

The overall system is under the control of timing and control circuit **84**, which provides control signals at the proper times and in the correct sequence to the various circuits in the apparatus. Basic timing is provided by oscillator **86**.

The apparatus is designed to be powered by standard utility supplied 60 Hz 117 volt AC power. This is converted to 9 volt DC power by supply **88** to power all the logic circuitry. In the event of a power failure, there is also provided 9 volt battery **90** to insure integrity of memories **14** and **16**. Comparator **92** provides a signal to disable the apparatus if battery **90** is not at full potential.

Referring now to FIG. **2**, VOX **50** is coupled to receive the output of amplifier **34**, whose input is derived from signals on the telephone line. VOX **50** consists of a halfwave rectifier with preset squelch and two integrating circuits. The first integrating circuit is a fast attack, slow decay integrator to smooth the rectifier output so as to provide a voltage corresponding to the average energy level of the audio input. The output of this integrating circuit is fed to a comparator. If the average energy level is above a preset bias the comparator is turned on. The output of this comparator is integrated by a slow attack, fast decay circuit to eliminate high energy, short duration, switching noises on the telephone line. The resulting signal is the input to another comparator. When this signal is above a preset bias, the output of the VOX is a logic ONE.

The aforementioned halfwave rectifier with preset squelch is comparator **102**, which is a rectifier with a bias. When the output of amplifier **34** on the non-inverting input of comparator **102** is higher than the bias applied to the inverting input of comparator **102**, the output of comparator **102** on line **104** is high. Inverter **106** inverts the signal on lead **104** to provide a low signal at its output on lead **108**, discharging capacitor **110**. When the voltage across capacitor **110** gets below the bias input to comparator **112**, the output of comparator **112** on lead **114** goes high. Capacitor **116** then charges. When the voltage across capacitor **116** gets above the bias voltage applied to the inverting input of comparator **118**, comparator **118** provides a high signal (a logic ONE) at VOX output **120**. When there is no energy on the telephone line, the output of comparator **102** is low, causing the output of inverter **106** to be high, charging capacitor **110**, placing a low signal on the output of comparator **112**, discharging **116**, and providing a low signal (a logic ZERO) at VOX output **120**.

Illustratively, resistor **122** has a value of 100K ohms, resistor **124** has a vlaue of 4K ohms, resistor **126** has a value of 22K ohms, and resistor **128** has a value of 4K ohms. Because of these relative resistance value, the integrating circuit of which capacitor **110** is a part, is a fast attack, slow decay integrator because capacitor **110** discharges very quickly through the 4K ohm resistor **124** and charges much slower through the 104K ohm resistance combination of resistors **122** and **124**. This integrating circuit smooths the rectifier output to provide a voltage corresponding to the average energy level of the audio input. The other integrating network, comprising resistors **126** and **128** and capacitor **116** is a slow attack, fast decay circuit wherein when there is energy on the telephone line, capacitor **116** charges through a 26K ohm path and when there is no energy detected on the telephone line, capacitor **116** discharges quickly through a 4K ohm path. The purpose of this arrangement is to kill short duration pulses which get through the first integrating network because of its fast attack characteristic.

VOX enable terminal **130** is utilized to selectively enable and disable VOX **50**. When a low level is applied to terminal **130**, the output of comparator **102** is clamped low, keeping the output of inverter **106** high shich allows capacitor **110** to charge, thereby keeping the output of comparator **112** low, which keeps capacitor **116** discharged and VOX output terminal **120** is maintained low. To enable VOX **50**, VOX enable terminal **130** is allowed to float, with no voltage being applied thereto. To accomplish the aforedescribed function, VOX enable terminal **130** is connected to an open collector gate **132** (FIG. **1**).

Referring now to FIG. **3**, functionally depicted therein is circuitry responsive to the output of VOX **50** for discriminating between different conditions on the telephone line. To determine that a call has been answered, it is first necessary to determine that at least one ring has appeared on the telephone line. A discrimination that this first ring has appeared on the telephone line is determined by a continuous VOX output of at least 900 milliseconds. After the first ring signal, if 40 seconds elapse before an answer is detected, the apparatus automatically terminates the telephone connection. If, after one or more rings, the called party answers the phone by lifting the receiver and saying "Hello", a normal response, the VOX will be activated by the "Hello" on the line. This word is normally more than 200 milliseconds but less than 1.2 seconds in duration. Thus, a VOX output for more than 200 milliseconds but for less than 1.2 seconds is considered to be an answer. If the called party merely lifts the receiver without saying anything, silence on the line for 8 seconds is also considered to be an answer. The call may also be answered by a recorded message which will appear on the line either because the number called is intercepted by the telephone company or an automatic telephone answering device is in use at the called number. In either case, a message of 10 seconds or more duration will appear on the telephone line. Because of natural pauses between words, the VOX output will not remain high during the entire message. However, it has been found that under such circumstances, the VOX output will remain high more than 80 percent of the time. If the

visited 2/18/2020

VOX output is high more than 80 percent of the time for approximately five seconds, the apparatus is caused to automatically hand up. The final telephone line condition which is discriminated is the presence of a busy signal on the telephone line. These signals are nominally 500 milliseconds in duration alternating with 500 milliseconds of silence. Since the busy signals are less than 900 milliseconds in duration, a ringing condition in not detected. Since each is greater than 400 milliseconds in duration, a busy counter is incremented. When the busy counter reaches a count of eight, the apparatus is caused to automatically hang up.

In summary, then, the discrimination of telephone line conditions is as follows:

BUSY: 8 VOX activations of more than 400 milliseconds but less than 900 milliseconds;

FIRST RING: VOX activation of more than 900 milliseconds;

SUBSEQUENT RING: VOX activation of more than 1.2 seconds but less than 50 percent VOX activity for any five second period;

ANSWER: VOX activation of more than 200 milliseconds but less than 1.2 seconds or eight seconds of inactivity of the VOX after the first ring;

RECORDED MESSAGE: VOX activation during 80 percent of any five second interval; and

NO ANSWER: Expiration of 40 second timer.

To understand how the foregoing is accomplished, the reader is referred to FIG. **3** which depicts, in functional form, circuitry for accomplishing the discrimination discussed above. The design of particular circuitry for implementing the functional blocks shown in FIG. **3** will be apparent to one of ordinary skill in the art, standard integrated circuit building blocks being commercially available to implement the different functions. FIG. **3** is a functional simplification of circuitry within VOX timer and announce recorder control circuit **52** (FIG. **1**), certain particular details of the circuitry not being shown, such as, for example, all the timing leads from timing and control circuit **84** (FIG. **1**). The following description of FIG. **3** follows the flow chart shown in FIG. **5**. The circuitry of FIG. **3** and the flow chart of FIG. **5** function after a number is dialed. The dialing will be described in more detail hereinafter with reference to FIGS. **4** and **6**.

After a number is dialed, VOX **50** is enabled, busy counter **150** is enabled (by means not shown) and **40** second timer **152** is enabled (also by means not shown). The circuitry shown in FIG. **3** causes either answer flipflop **154** or repeat flipflop **156** to be set as a consequence of the particular condition discriminated. Answer flipflop **154** is set only when a valid answer is detected. Repeat flipflop **156** is set either when the 40 second timer **152** times out due to continued ringing, or a busy condition is detected, or a recorded message is sensed on the telephone line. When answer flipflop **154** is set, the recorded announcement is transmitted over the telephone line. When repeat flipflop **156** is set, the connection to the telephone line is terminated by the apparatus hanging up and the start of a new call is initiated, in a manner to be described subsequently. Timer **152** is reset after detection of a line condition (by means not shown).

With VOX **50** enables, when the first ring appears on the telephone line, terminal **120** is high. This high signal is inverted by inverter **158** to provide a low signal to the enable input of counter **160**, enabling counter **160** to begin counting the 10 hertz pulses on its input lead **162**. These 10 hertz pulses are supplied by timing and control circuit **84** (FIG. **1**). When counter **160** reaches a count of 8, this indicates that 800 milliseconds of VOX detected energy on the telephone line has occurred. This provides a high signal on lead **164** to the D input of flipflop **166**. When counter **160** reaches a count of 9, lead **168** also goes high, clocking and setting flipflop **166** so that its Q output on lead **170** goes high, flipflop **166** having previously been cleared by the VOX input on terminal **120** being low. With a high signal on lead **170**, counter **160** is set to an internal count of 9 and is held at that count as long as the high signal persists on lead **170**. When the Q output of flipflop **166** went high at the count of 9 from counter **160**, the $\overline{Q}$ output of flipflop **166** on lead **172** went low, setting ringing flipflop **174**. This setting of ringing flipflop **174** indicates that 900 milliseconds of VOX activity has been detected. Before this setting of ringing flipflop occurred, when counter **160** reached a count of 4, indicating 400 milliseconds of VOX activity, a signal on lead **176** caused busy counter **150** to be incremented. When busy counter **150** reaches a count of 8, it causes repeat flipflop **156** to be set through OR gate **178**. However, as this is the start of a ringing cycle, busy counter is only at a count of 1. It will also be recalled that 40 second timer **152** has been started. If 40 second timer **152** times out, it will set repeat flipflop **156** through OR gate **178**.

With ringing flipflop **174** set, a high signal appears at its Q output on lead **180**. A high signal on lead **180** removes the clear input from one second one-shot **182**. The high signal on lead **180** also partially enables NAND gate **184**. The other input to NAND gate **184** is the output of inverter **186** whose input is the VOX output on terminal **120**. With no VOX activity, the output of inverter **186** on lead **188** will be high. With the concurrence of no VOX activity and ringing flipflop **174** being set, the output of NAND gate **184** will enable counter **190** to count the one hertz pulses applied to its input on lead **192** from timing and control circuit **84** (FIG. **1**). When counter **190** reaches a count of 8, this indicates that 8 seconds of silence on the telephone line have occurred at some point after a first ring has been detected. As discussed above, this is interpreted as an answer. Therefore, with an output signal being applied to lead **194** from counter **190**, indicating that counter **190** has timed 8 seconds of VOX inactivity after the ringing flipflop **174** has been set, ringing flipflop **174** is reset. The $\overline{Q}$ output of ringing flipflop **174** on lead **196** going high causes answer flipflop **154** to be set through OR gate **198**.

Assuming that subsequent ringing signals are detected, busy counter **150** will be incremented after 400 milliseconds of each ringing signal. Since ringing signals are spaced nominally six or seven seconds apart, 40 second timer **152** will time out before busy counter **150** reaches a count of 8. However, if busy signals are detected on the line, these signals only last 500 milliseconds and busy counter **150** will be incremented once each second, therefore reaching a count of 8 in approximately 8 seconds, causing repeat flipflop **156** to be set.

Returning now to the condition of continued ringing, with ringing flipflop **174** set, the clear input is removed from one second one-shot **182**. After 200 milliseconds of VOX activity, one second one-shot **182** is fired by the signal on lead **183** from counter **160**. At the end of its one second time period, 10 microsecond one-shot **202** is fired. 10 microsecond one-shot **202** is utilized to provide a strobe pulse on lead **204** which checks to see whether

visited 2/18/2020

VOX activity still persists, as determined by the state of flipflop **166**. If VOX activity still persists, lead **172** will be low. However, if there is no longer any VOX activity 1.2 seconds after VOX activity has started, flipflop **166** will have been cleared and lead **172** will be high, enabling AND gate **206** and causing answer flipflop **154** to be set through OR gate **198**. This condition is, as described above, a valid answer condition in that there has been VOX activity for at least 200 milliseconds but for less than 1.2 seconds.

The last condition to be discriminated is the condition of a recorded announcement, which is detected as 80 percent VOX activity for 5 seconds. To detect such condition, there is provided resistor **208**, capacitor **210**, and comparator **212**. Resistor **208** and capacitor **210** form an integrating network. Their values are illustratively chosen to be 1.2 megohm for resistor **208** and 3.3 microfarads for capacitor **210**. This provides an approximately five second time constant and the reference voltage applied to the inverting input of comparator **212** in combination with the resistance capacitance network causes a low signal to appear at the output of comparator **212** on lead **214** after approximately five seconds of 80 percent VOX activity. This low signal on lead **214** causes busy counter **150** to be set to 9. With busy counter **150** set to 9, its 8 count output on lead **216** is high, causing repeat flipflop **156** to be set through OR gate **178**. In other words, a recorded announcement on the line is detected and the circuitry is logically set as if a busy condition were sensed.

Referring now to FIG. **4**, functionally shown therein is a block schematic diagram of circuitry for implementing the dialing function after dial tone is detected by tone decoder **36** (FIG. **1**) and enable dial flipflop **40** is set thereby. The following description of the circuitry shown in FIG. **4** describes how the circuitry functions to follow the flow chart of FIG. **6**, and the reader is referred thereto during the following description.

Dialing is accomplished by alternately energizing and de-energizing dial relay **26** (FIG. **1**). Off-hook terminal **250** is connected to dial relay **26** and a low signal at terminal **250** energizes relay **26**. A high signal on terminal **250** de-energizes relay **26**. When relay **26** is energized, it closes the connection in the telephone coupler between OH **1** and OH **2**, thereby providing an off-hook to the telephone line. During a telephone connection, the condition of the telephone line is normally off-hook. During dialing, a sequence of on-hooks alternating with off-hooks causes the telephone switching equipment at the local telephone company central office to count the number of on-hooks to determine the particular digit that was dialed. During the telephone connection, phone digit flipflop **252** is normally in a reset state so its $\overline{Q}$ output on lead **254** is high, causing NOR gate **256** to provide a low output on terminal **250**. During the dialing, in a manner to be described hereinafter, phone digit flipflop **252** is set so its $\overline{Q}$ output is low, causing the 10 hertz clock pulses on lead **258**, supplied by timing and control circuit **84** (FIG. **1**), to generate alternate on-hook and off-hook signals at terminal **250**. The length of time that phone digit flipflop **252** is set is determined by the particular digit being dialed so that the proper number of 10 hertz clock pulses pass through NOR gate **256**.

When it is desired to dial a phone number, a 40 second timer (not shown) is started and dial tone decoder **36** is monitored to determine whether dial tone is detected within that 40 second period. If the 40 second timer completes timing the 40 second interval without dial tone being detected, repeat flipflop **156** is set (FIG. **3**, by means not shown) to restart the cycle. When dial tone is detected, enable dial flipflop **40** is set. This removes the clear from the phone digit flipflop **252**, leaving a high signal on its $\overline{Q}$ output on line **254**. At this time, pointer shift register **260** is loaded, its contents indicating how many digits are to be dialed, in a manner to be described by the following.

The number to be dialed is stored in 11 stage memory/counter **14**. This number is stored in binary coded decimal (BCD) form. At this time, the number is to be displayed on display **20**. An 11 phase clock over leads **262** from timing and control circuit **84** (FIG. **1**) sequentially causes the eleven possible phone digits to be outputed to BCD to 7 segment decoder/driver **22** which controls display **20**. A telephone number being dialed has at a maximum 11 digits: an initial ONE, three digits for the area code, and seven digits for the local telephone number. Some of these digits may not be utilized, but in all cases, the first digit to be dialed is not zero. Therefore, leading zeros are logically ignored and displayed as blanks, not zeros. Decoder/driver **22** has an output lead **264** that is high (a logical ONE) when a digit is blank. These are all in the leading positions of the possible 11 digit phone number. It is these signals on lead **264** that are gated into pointer shift register **260** by the 11 phase clock on leads **262**. Pointer shift register **260** is a 12 bit shift register, its first bit position always being a ONE, the next four bit positions indicating if there are blank digits not to be dialed, and the last seven bit positions being ZERO. Therefore, the number of trailing ZEROS in pointer shift register **260** corresponds to the number of phone digits to be dialed for a particular phone number. The number of leading ONES equals twelve minus the number of phone digits to be dialed.

After pointer **260** is loaded, and between successively dialed digits, there is a one second pause which is determined by examining the borrow output of digit counter **266** on lead **268**. Digit counter **266** is decremented by the 10 hertz clock pulses on lead **258**. When enable flipflop **40** was set, digit counter **266** has been cleared to ZERO by the signal on its clear input **270**. When digit counter **266** is decremented, it takes 10 pulses of the 10 hertz clock on lead **258** to bring digit counter **266** back to ZERO again, at which time there is a low signal at its borrow output on lead **268**. At this time, phone digit flipflop **252** and read flipflop **270** are clocked. This does not change the state of phone digit flipflop **252**, because its $\overline{Q}$ output was already high. However, read flipflop **270** is clocked to provide a high signal on its Q output on lead **272**. This partially enables NAND gate **274**. The other input to NAND gate **274**, called DATA READY, on lead **276** is the output of scanner **278**. Scanner **278** utilizes the 11 phase clock on leads **262** to look at the first 11 bit positions of pointer **260**. Whenever there is a ONE in one of the bit positions of pointer shift register **260**, a DATA READY pulse on lead **276** is generated. This causes a pulse to be generated on lead **280** which is the load input of digit counter **266**. This causes the corresponding digit of 11 stage memory/counter **14** to be loaded into digit counter **266**. As long as there is ONE in pointer shift register **260**, a digit is read into digit counter **266**, but only the last digit read in will remain in digit counter **266**; each time a digit is read in it erases the previous digit read in. The load pulse on lead **280** also preset phone digit flipflop **252** to cause its $\overline{Q}$ output on lead **254** to go low. This allows the

visited 2/18/2020

output of NOR gate **256** to be controlled by the 10 hertz clock pulses on lead **258**. It should be noted at this point that the ll phase clock on leads **262** are at a much faster rate than the 10 hertz pulses on lead **258** so that during the time that the above-mentioned loading of digit counter **266** has occurred, there have been no 10 hertz clock pulses on lead **258**.

Now that a digit is stored in digit counter **266**, the 10 hertz clock pulses on lead **258** decrement digit counter **266**. Each time that a 10 hertz clock pulse on lead **258** decrements digit counter **266** it also generates an on-hook signal at lead **250**. This continues until digit counter **266** reaches zero, so that a number of on-hook pulses have been generated corresponding to the digit to be dialed. When digit counter **266** reaches zero, its borrow output on lead **268** clocks phone digit flipflop **252** and read flipflop **270**. (At this point it should be noted that the decrementing occurs prior to checking the borrow output so that if a phone digit were zero, ten dial pulses would have been generated). Since phone digit flipflop **252** had been in the set state with its $\overline{Q}$ output low, read flipflop **270** is clocked so that its $\overline{Q}$ output on lead **282** is now high. Phone digit flipflop **252** is clocked so its $\overline{Q}$ output on lead **254** now goes high. The high output on lead **282** combines with the borrow output on lead **268** to generate a shift pointer signal on lead **284** through NAND gate **286** and inverter **288**. This shift pointer signal on lead **284** shifts the array of leading ONES in pointer **260** one position toward the trailing end.

At this time, digit counter **266** is decremented by the 10 hertz pulses on lead **258** to provide the one second interdigit pause. When digit counter **266** again reaches ZERO, phone digit flipflop **252** and read flipflop **270** are clocked. This causes the next digit in 11 stage memory/counter **14** to be read into digit counter **266** because the last ONE bit in pointer shift register **260** has been moved one position toward the trailing end. The aforedescribed cycle is repeated until the last phone digit of the number has been dialed. After the last phone digit has been dialed, when pointer shift register **260** has its contents shifted, a ONE will appear in its twelfth bit position. This causes a number complete signal to appear on lead **290**, which resets enable dial flipflop **40**, terminating the dialing sequence.

After the number is dialed, the circuitry shown in FIG. **3** and discussed above is utilized to discriminate between possible conditions on the telephone line. In the event that the repeat flipflop **156** has been set due to there being no answer, a busy condition, or a recorded announcement detected on the telephone line, a clear pulse is caused to be generated (by circuitry not shown), the apparatus terminates the telephone connection, increments 11 stage memory/counter **14** by a predetermined number to generate a new number, decrements number of calls memory/counter **16**, and if it is determined by the contents of numbers of calls memory/counter **16** that calls are still to be made, an illustratively 8 second interval is timed after which the telephone connection is placed in an off-hook condition and the apparatus again waits to detect dial tone. In the event answer flipflop **154** had been set, this causes enable announce flipflop **54** (FIG. **1**) to be set to transmit a message over the telephone line. After transmission of the message, enable response flipflop **66** will be set. If response time switch **68** is set to an ANNOUNCE ONLY position, enable response flipflop **66** will be immediately reset which will set repeat flipflop **156** to start the cycle over again.

Assuming that response time switch **68** is set to one of the selected positions (illustratively 4, 12 or 20 seconds of response recording time), a response timer within response recorder control **67** will be started. The reader is referred now to FIG. **7** which depicts a flow chart showing how the apparatus functions to record a response. Assuming there is a valid response on the telephone line, in a manner to be described hereinafter, the setting of response time switch **68** causes the output of the response timer to be checked at corresponding time intervals and if the response timer reaches the set time, repeat flipflop **156** is set to initiate a new cycle. To check that a valid response is on the line, after two seconds, VOX **50** is enabled. This is to give the called party on the telephone line two seconds in order to think of something to say. If there is no output from VOX **50** at the end of four seconds, repeat flipflop **156** is set. If there is a VOX output detected, a response flipflop within response recorder control **67** is set to indicated that a valid response has been detected. At this time, the outputs of VOX **50** and tone decoder **36** are monitored. The concurrence of an output from VOX **50** and tone decoder **36** indicates that dial tone is on the line because the called party has hung up after giving some response. This causes repeat flipflop **156** to be set so that the apparatus terminates the connection and calls the next telephone number in sequence.

Accordingly, there has been described apparatus according to the principles of this invention for supplying a prerecorded message to a plurality of telephone subscriber stations in sequence and recording responses from the stations after supplying the message thereto. Advantageously, the apparatus detects the presence of energy on the telephone line and times such detection in order to discriminate between different conditions on the telephone line after the number is dialed. It is understood that the above-described arrangement is merely illustrative of the application of the principles of this invention. Numerous other arrangements may be devised by those skilled in the art without departing from the spirit and scope of this invention as defined by the appended claims.

What is claimed is:

1. Automatic telephone dialing apparatus comprising:

means for storing a telephone number to be called;

a counter;

a shift register having a leading end and a trailing end, the number of bit positions in said shift register being one more than the maximum number of digits to be dialed;

means for inserting in said shift register a plurality of consecutive ONES starting at said leading end, the number of ONES equaling the difference between the number of shift register bit positions and the number of digits of the telephone number to be called;

means for scanning said shift register bit positions starting at the leading end;

means for inserting into said counter from said storing means the digits of the stored telephone number in sequence in synchronism with the scanning of said shift register whenever a ONE is detected in a bit position of said shift register;

means for decrementing said counter;

means responsive to said counter being decremented for generating a dial pulse; and

visited 2/18/2020

means responsive to said counter reaching a count of zero for terminating said dial pulse generation.

2. Automatic telephone dialing apparatus according to claim 1 further including means responsive to said counter reaching zero for shifting the contents of said shift register one position toward its trailing end.

3. Automatic telephone dialing apparatus according to claim 2 further including means responsive to the presence of a ONE in the shift register bit position closest to the trailing end for terminating dialing of the telephone number to be called.

4. Automatic telephone dialing apparatus according to claim 1 further including means for pausing a predetermined time between dialing of successive digits.

5. Automatic telephone dialing apparatus according to claim 4 wherein said pausing means include means responsive to said counter being zero for decrementing said counter to zero again.

* * * * *

visited 2/18/2020

United States Patent [19]

Sheldon et al.

[11] **3,943,289**

[45] **Mar. 9, 1976**

[54] **AUTOMATIC TELEPHONE CALLER**

[75] Inventors: **Norman A. Sheldon,** Denver; **Erwin L. Dosch,** Lakewood, both of Colo.

[73] Assignee: **Environmental Developers, Inc.,** Denver, Colo.

[22] Filed: **July 12, 1974**

[21] Appl. No.: **488,071**

[52] **U.S. Cl.** ..... **179/6 D;** 179/90 B

[51] **Int. Cl.**[2] **H04M 1/44**

[58] **Field of Search** ..... 179/6 D, 5 P, 90 B, 90 BB

[56] **References Cited**

UNITED STATES PATENTS

3,105,121	9/1963	Field	179/6 D
3,301,958	1/1967	Blakeslee et al.	179/6 D
3,445,601	5/1969	Whitely et al.	179/6 D
3,718,771	2/1973	Bank	179/90 B

Primary Examiner—Vincent P. Canney
Attorney, Agent, or Firm—Lowe, King & Price

[57] **ABSTRACT**

A prerecorded message is supplied to a plurality of telephone subscriber numbers automatically called in sequence from a local station. Upon placing the call to the first number, another second number is established by changing the first called number by a predetermined increment. In response to the first called number being reached, the prerecorded message is coupled to a telephone line at the local station. In response to the call being either completed or the elapse of a predetermined time during which it is expected that the called subscriber should answer the phone, a signal is derived to indicate that operations for the first party have been terminated. In response to the termination signal, the telephone is repeatedly hung up and picked up automatically until the prerecorded message has been completed and a dial tone has been detected, at which time the second number is called. The device is activated repeatedly in this manner. Counters are provided to sense the number of completed calls, the number of calls in which the called subscriber hangs up prior to the end of the prerecorded message and the number of called subscribers who cannot be reached.

12 Claims, 3 Drawing Figures

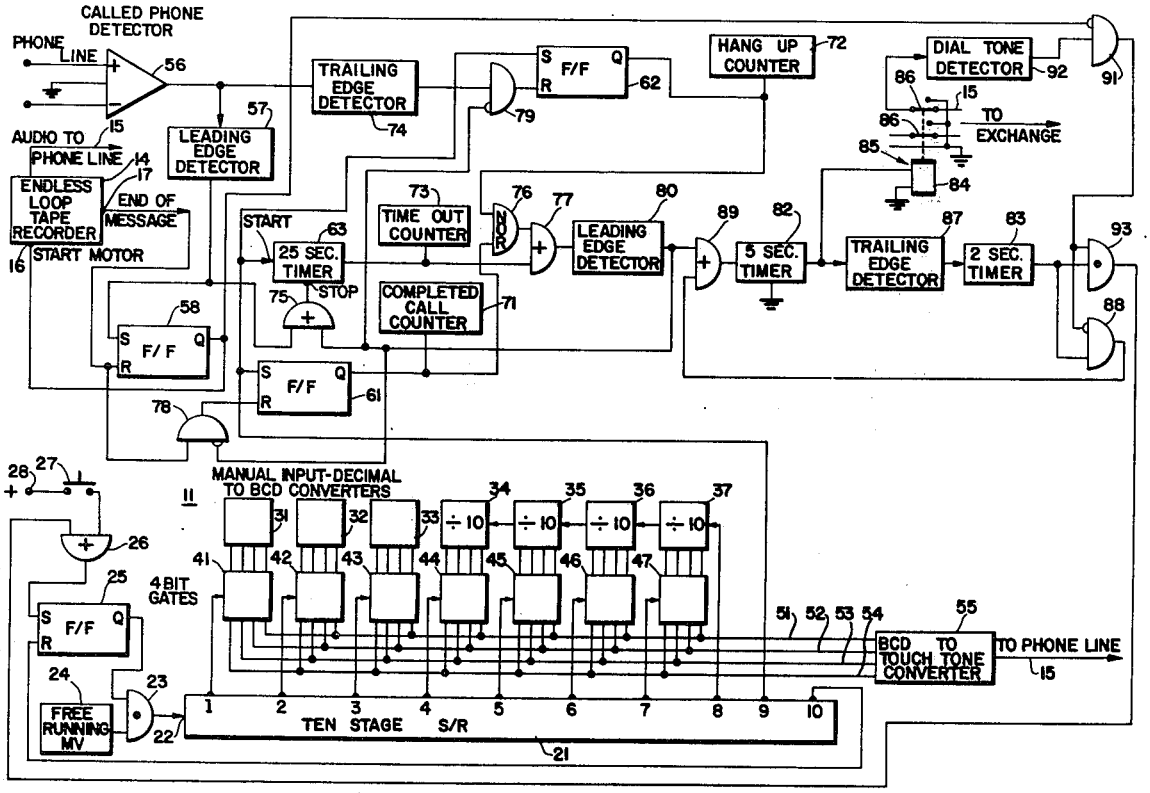

visited 2/18/2020

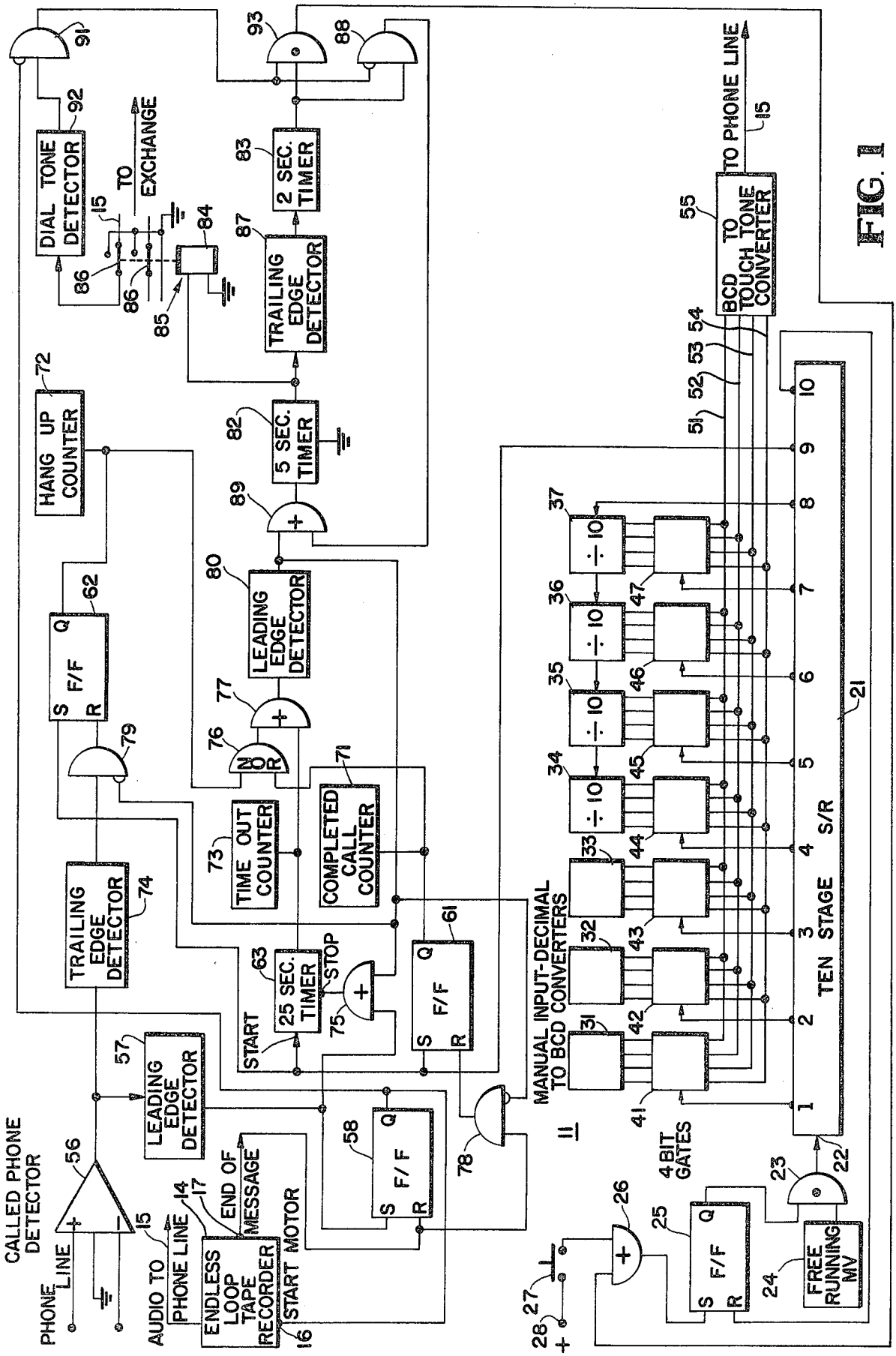

FIG. 1

visited 2/18/2020

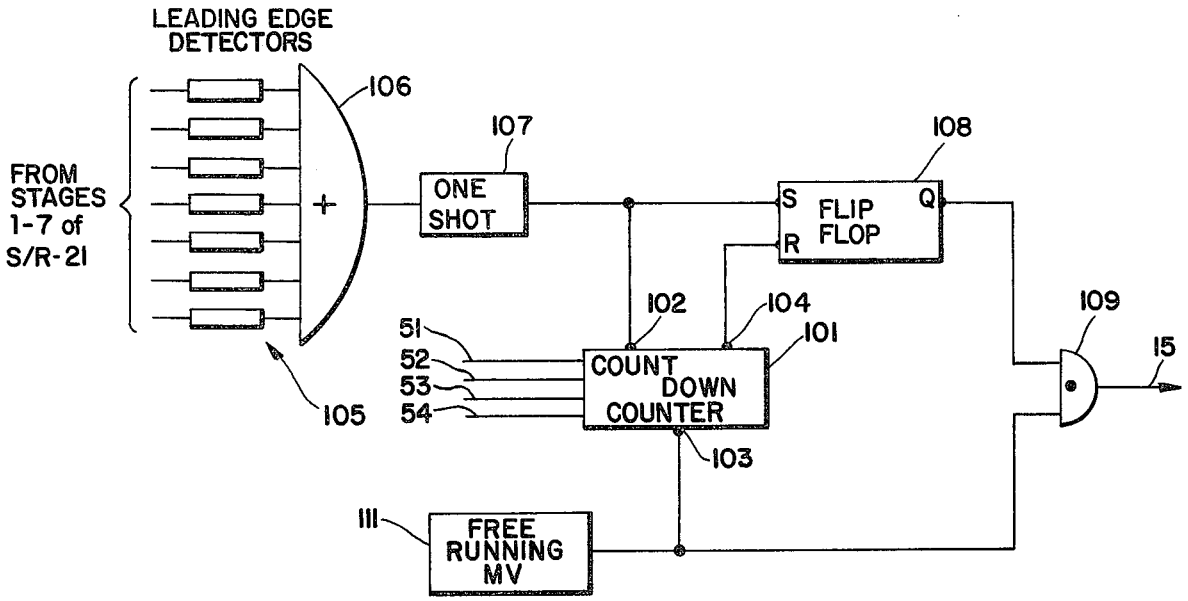

FIG. 2

FIG. 3

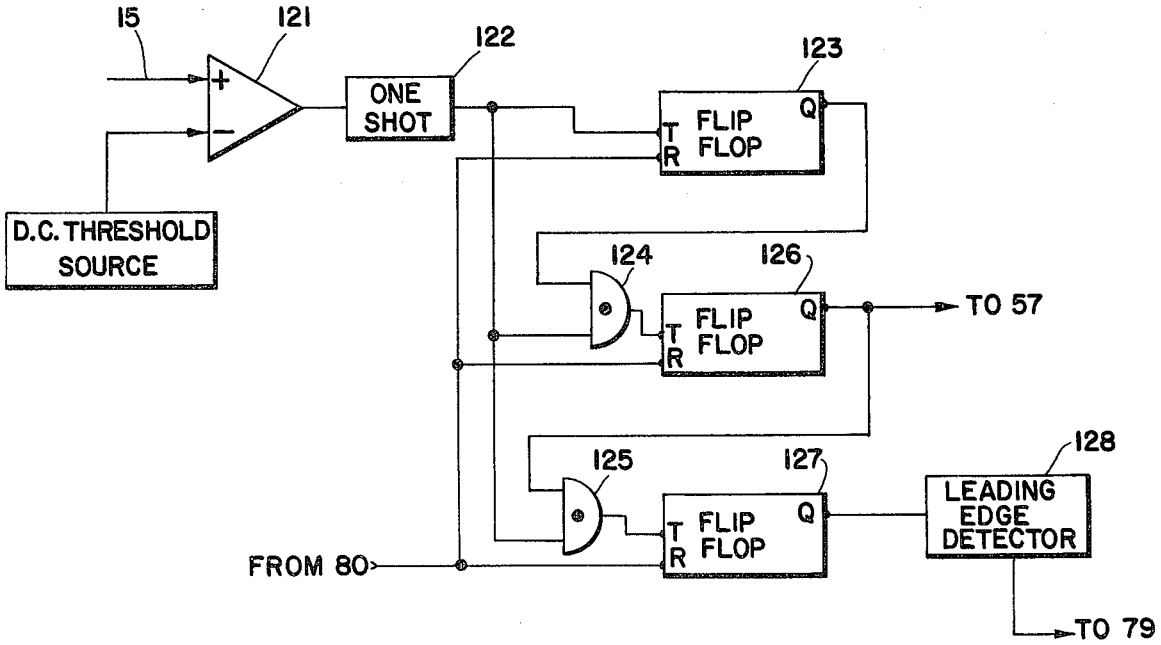

visited 2/18/2020

AUTOMATIC TELEPHONE CALLER

FIELD OF THE INVENTION

The present invention relates generally to automatic telephony apparatus and more particularly to a device for automatically calling a relatively large number of subscribers in sequence and presenting a prerecorded message to each of the subscribers who answers the call.

BACKGROUND OF THE INVENTION

The dissemination of information to a large number of telephone subscribers such that each of the subscribers receives the same or approximately the same message has become widespread for various purposes, e.g., solicitation, advertising and data presentation. Typically, the calling and presentation of the message are performed manually by a salaried individual, thereby being relatively expensive. Also, manual dialing of a telephone is susceptible to mistakes and may result in calling of the wrong subscriber or the same subscriber being called twice in succession, with possible resulting deleterious effects on the business of the calling party.

While some devices have been designed to enable different telephone numbers to be automatically called in sequence wherein a predetermined message is presented to an answering called party, these devices have generally been utilized in conjunction with emergency warning devices. In particular, the devices have been utilized for automatically calling the numbers of police or fire departments or other parties that are responsive to an emergency situation. The prerecorded message presents information regarding the location where an emergency situation has been automatically detected by transducers such as burglary alarms, fire arms, or machinery monitoring devices.

The prior art automatic emergency calling devices, however, are not adapted to cope with certain circumstances that may result when a large number of telephone subscribers are called in sequence and presented with a prerecorded message. There is a very low probability in automatic emergency calling devices of premature hang up, i.e., the called subscriber hanging up on the prerecorded message prior to completion of the message. Also, the emergency calling devices are generally manually reset to the beginning of a message after the called party has answered and are not automatically reset to the beginning of a message prior to the next call being instigated.

Typically, the prior art devices are capable of calling only a relatively small number of subscribers. At least one of the emergency numbers being called is certain to be responsive to the call, since the called emergency numbers are fire departments, police departments, etc. Thereby, it is feasible to utilize a preprogrammed device whereon there are stored all of the numbers to be called in sequence. In many instances if a relatively large number of subscribers are to be called in sequence, the cost of storing all of the numbers on a preprogrammed device, such as a magnetic tape, may be prohibitive.

BRIEF DESCRIPTION OF THE INVENTION

In accordance with the present invention, at a local station there is provided a new and improved device connected to a telephone line for calling a relatively large number of remote telephone subscriber stations

in sequence and presenting each of the answering subscribers with a prerecorded message. In accordance with one feature of the invention, the telephone number of subscribers called in sequence is changed by a predetermined number each time a new number is called. The number is changed by incrementing a register by a predetermined account, such as one, each time a subscriber number is called. Thereby, there is no need to provide a relatively costly preprogrammed medium for storing a large number of telephone numbers to be called.

It is recognized that there may be some bias on the part of a called subscriber to receiving a prerecorded telephone message and that there is a certain likelihood of the called answering subscriber hanging up prematurely. In the event of premature subscriber hang up, the local station is disconnected from the line, the prerecorded message is played back completely, stopped just prior to the beginning of the message, and is not begun again until a new subscriber has been reached. Thereby, the new answering subscriber is always initially presented with the beginning of the prerecorded message and the likelihood of his being attentive to the message is increased many fold.

In accordance with a further feature of the invention, circuitry is provided to detect: (1) the called subscriber not answering his receiver (because the called subscriber line was busy or did not answer his receiver), (2) a call was completed to the called subscriber and the called subscriber listened to the entire prerecorded message; and (3) the call was completed to the called subscriber and the called subscriber hung up prematurely. A counter is provided to provide an indication of the number of each of these three categories, thereby enabling a measure of the effectiveness of the device to be determined.

In accordance with another aspect of the invention, upon the termination of a completed call or upon an indication being derived that the called party could not be reached, the telephone line is repeatedly disconnected and connected to the local station until the prerecorded message cycle has been completed and a dial tone has been detected. In response to the prerecorded cycle being completed and the dial tone being detected, the apparatus is advanced so that the next number is automatically called. By repeatedly hanging up the local station and reconnecting the local station until detection of both a dial tone and completion of the prerecorded message cycle, the device of the present invention does not continuously load down the telephone line while it is not in use.

It is, accordingly, an object of the present invention to provide a new and improved automatic telephone dialing apparatus wherein a relatively large number of telephone subscribers are called in sequence.

Another object of the invention is to provide an automatic telephone dialing system for enabling prerecorded messages to be presented to subscribers to whom calls are completed, wherein the numbers of called subscribers are changed by a predetermined amount each time a new call is placed.

Another object of the invention is to provide an automatic telephone dialing apparatus wherein a prerecorded message is presented to subscribers to whom a call is completed and a record is maintained of the number of called subscribers who listen to the complete message, as well as the number of called subscribers who hang up prematurely.

visited 2/18/2020

Another object of the invention is to provide an apparatus for automatically calling a number of predetermined telephone subscribers and presenting a prerecorded message to subscribers to whom the call is completed, wherein the beginning of the message is always initially presented to the answering subscriber, regardless of whether the previously called subscriber listened to the entire message or only a portion of the message.

A further object of the invention is to provide a new and improved device for presenting a prerecorded message to telephone subscribers that are automatically called in sequence, wherein a new subscriber is called after the previously called subscriber has hung up or an indication is derived that the previously called subscriber did not answer his receiver.

A further object of the invention is to provide a new and improved apparatus for automatically calling telephone subscribers in sequence wherein there is a minimum line seizure time from the completion of the last call or a determination that the last call could not be completed to the initiation of the next call, even though the next call is not initiated until a dial tone is available and a prerecorded message has been completely played back so that the beginning of the message is initially supplied to the next called subscriber.

The above and still further objects, features and advantages of the present invention will become apparent upon consideration of the following detailed description of one specific embodiment thereof, especially when taken in conjunction with the accompanying drawing.

BRIEF DESCRIPTION OF THE DRAWING

FIG. 1 is a block diagram of one embodiment of the present invention;

FIG. 2 is a circuit diagram of an alternate circuit for deriving dialing pulses, instead of touch tones; and

FIG. 3 is a circuit diagram of an alternate disconnect circuit which is adapted for use at virtually all exchanges.

DETAILED DESCRIPTION OF THE DRAWING

Reference is now made to FIG. 1 wherein there is illustrated a block diagram of a preferred embodiment of the local automatic telephone calling system of the present invention. The apparatus illustrated in FIG. 1 broadly includes four basic parts, a calling or number control circuit **11**, a called detector **12**, a ready for new call detector circuit **13**, and endless loop tape recorder **14** on which is prerecorded a message which is to be transmitted over telephone line **15**. Calling circuit **11** establishes the number of a telephone subscriber to be called and is automatically incremented by a count of one prior to the next call being instigated. Called detector circuit **12** is responsive to the called subscriber answering his receiver and includes circuitry for detecting whether the called subscriber: (a) answered the receiver and listened to the entire message, (b) answered the receiver and hung up his receiver prior to the recorded message being completed, and (c) was not reached within a predetermined time after the call was placed. The called subscriber may not have been reached because no one answered the receiver or because the line of the called subscriber was busy.

Ready for new call detector circuit **13** repeatedly disconnects and connects the receiver at the local, calling station to telephone line **15** to determine if a dial tone is available from the line. A dial tone can be

available from telephone line **15** only after the prerecorded message has been completed, whereby the next called subscriber is always provided with the beginning of the prerecorded message at the beginning of the call. In response to detector circuit **13** sensing that the line is available and the recorded message from the last call being completed, calling circuit **11** is actuated, causing a new number of a telephone subscriber to be called.

Endless loop tape recorder **14** includes start-stop input terminal **16** which is responsive to a bi-level signal. In response to a binary one state being applied to the bi-level signal terminal **16**, a motor included in the tape recorder is activated, causing the tape of the recorder to be driven through a complete cycle to feed the prerecorded message as an audio signal to telephone line **15**. The motor in tape recorder **15** is driven until the endless loop of the tape recorder has completed a cycle, at which time the motor is stopped and the recorder motor is not started again until a further binary one level is coupled to terminal **16**. To enable a complete cycle of the loop to be detected, the tape includes a foil that functions as a shorting element to signal the completion of a tape loop cycle. The recorder **14** includes internal circuitry, well known to those skilled in the art, to cause the motor to stop driving the tape in response to the foil being sensed. The signal to stop the motor of recorder **14** is applied in parallel to output terminal **17** to indicate that the tape has been driven through a complete cycle and that the message on the tape has been completed. The end of message signal derived from terminal **17** serves as an input to call detector circuit **12**, enabling circuit **12** to determine if the called subscriber listened to the entire message or hung up in the middle of the message prior to completion thereof.

Calling circuit **11** includes a ten stage shift register **21** having a clock input terminal **22** responsive to the output of AND gate **23**. AND gate **23** is responsive to a square wave output voltage of free running multivibrator **24**, having a frequency of one Hertz. AND gate **23** is enabled in response to a binary one being derived from set output terminal (Q) of flip-flop **25**. Flip-flop **25** includes a set input responsive to the output of OR gate **26**, having an input that is selectively coupled through manually actuated start contact **27** to a positive voltage at terminal **28**. OR gate **28** also includes an input from the output of ready for new call detector circuit **13**, whereby a binary one level is derived from OR gate **26** either in response to manual, initial actuation of contact **27** or in response to detector circuit **13** indicating that telephone line **15** is available and that the prerecorded message from the last call has been completed.

The binary one output of OR gate **26** activates flip-flop **25** to a set state, where it remains until a binary one signal is applied to a reset input of the flip-flop from the output of the tenth stage of register **21**. In response to flip-flop **25** being activated to the reset state, AND gate **23** is disabled and the rectangular wave output of free running multivibrator **24** is not applied to clock input terminal **22** of shift register **21**. Thereby, shift register **21** is cycled through its 10 stages for a time period lasting approximately 10 seconds.

The first seven stages (stages **1–7**) of shift register **21** enable the seven digits of a seven digit telephone subscriber number to be actuated in sequence, similarly to manually actuating a touch tone or dial actuated telephone hand set. The number called is determined by

visited 2/18/2020

the state of three manually actuated decimal to four bit binary decimal converters **31, 32** and **33,** as well as the state of four cascaded divide by ten frequency dividers **34, 35, 36** and **37,** each of which derives a four bit binary coded decimal signal. Converters **31–33** are manually actuated to the exchange desired to be called and thereby derive output signals commensurate with the numerals of the first three digits of a seven digit subscriber number.

Cascaded frequency dividers **34–37** are automatically advanced in sequence immediately after the last call was placed. To this end, the output of stage eight of shift register **21** is applied to an input of frequency divider **37,** whereby the digital count in divider **37** is incremented by a count of one after the seven digits for the last called number have been dialed. By incrementing the count of divider **37** by a count of one the last digit of a seven digit telephone subscriber number is advanced by a count of one. Counters **34–37** are activated so that if the device is left in operation for a sufficiently long period of time 10,000 digital numbers are derived in sequence from dividers **34–37** to represent the 10,000 different numbers of the exchange manually entered into converters **31–33.** Each of converters **31–33** and dividers **34–37** includes internal connections for converting the digital numbers therein into binary coded decimal numbers representing the digital numbers. To this end, each of converters **31–33** and dividers **34–37** includes four separate counter stages, each of which has an output lead on which is derived a bit of the binary coded decimal signal.

To read out the seven digits of the number of a called subscriber, seven four bit gates **41–47** are provided. Each of gates **41–47** includes an enable input terminal, which when driven into a binary one state causes four bits to be passed from the four input terminals to the four output terminals of each of the gates. The four input terminals of each of gates **41–47** are respectively connected to the four output terminals of converters **31–33** and frequency dividers **34–37.** Gates **41–47** are respectively connected to output terminals of stages **1–7** of shift register **21,** whereby gates **41–47** are activated in sequence. Corresponding output terminals of gates **41–47** derive signals for corresponding binary orders of the four bit binary coded decimal signal supplied thereto. Output leads of gates **41–47** carrying signals for the same ordered bit are connected together so that the signals on leads **51, 52, 53** and **54** indicate the presence or absence of a binary signal respectively representing 2^0, 2^1, 2^2 and 2^3.

The signals on leads **51–54** are applied to binary coded decimal to touch tone converter **55** which derives output signals having ten different frequencies representing the tones of a touch phone. The multi-frequency signal derived from converter **55** is applied to telephone line **15.** The seven derived binary coded decimal signals are sequentially applied by leads **51–54** to converter **55** as register **21** is shifted through stages **1–7** so that seven tones are sequentially supplied by converter **55** to telephone line **15.** In the alternative, the binary code decimal to touch tone converter **55** can be replaced with a binary coded decimal to dialing pulse converter, as discussed in detail infra.

After the seven digit called subscriber number has been applied to phone line **15** and the number of the next called subscriber has been entered into dividers **34–37,** shift register **21** is advanced to stage nine, causing called detector circuit **12** to be activated. Called detector circuit **12** includes differential, D.C. operational amplifier **56** that derives a bi-level signal. Operation amplifier **56** includes a ground input terminal connected to a ground line of telephone line **15,** a positive input terminal connected to the tip line of the telephone line, and a negative input terminal connected to the ring line of a telephone line. Amplifier **56** is relatively easily saturated to derive a positive output voltage in response to phone line **15** being initially connected to a subscriber station. When phone line **15** is disconnected from a subscriber station, the polarity of the tip and ring lines is reversed, causing the output of operation amplifier **56** to be driven to a negative voltage. Thereby, a positive going, leading edge is derived at the output of amplifier **56** in response to the called subscriber picking up his receiver, and a negative going, trailing edge is derived from the amplifier when the called subscriber hangs up his receiver.

In response to the called subscriber picking up his receiver, the prerecorded message of tape recorder **14** is supplied to telephone line **15** by supplying a binary one signal to terminal **16** of recorder **14.** To this end, leading edge detector **57** is connected to be responsive to the output of operational amplifier **56.** Leading edge detector **57** includes a differentiator and diode poled so that a pulse is derived from the detector only in response to the positive going, leading edge of the output signal of amplifier **56,** as occurs in response to the called subscriber picking up the receiver. The output pulse of detector **57** is applied to a set input terminal (S) of flip-flop **58,** having a set output terminal (Q) which is connected to start-stop input terminal **16** of recorder **14.** Flip-flop **58** includes a reset input terminal (R) responsive to the end of message signal derived from terminal **17** of recorder **14.** Thereby, flip-flop **58** is activated into a binary one state to derive a binary one output at its set output terminal for the entire time that the tape of recorder **14** is being driven through a cycle.

The bi-level output of amplifier **56,** the end of message output signal at terminal **17** of tape recorder **14,** and the signal derived from stage nine of register **21** are supplied to call detector circuit **12** to control the activation of flip-flops **61** and **62,** as well as timer **63.** Flip-flops **61** and **62,** and inhibit gates **64** and **65,** respectively connected to the set (Q) output terminals of the flip-flops, are provided to detect whether or not the called subscriber listened to the entire prerecorded message of recorder **14.** Timer **63** and inhibit gate **66,** connected to the timer output, are provided to determine if the called subscriber failed to answer his receiver, either because the receiver of the called subscriber was busy or was not picked up in a reasonable time (e.g., 25 seconds) when called. For each called subscriber, one of counters **71, 72** or **73,** respectively connected to the output terminals of inhibit gates **64, 65** and **66,** is activated to enable a record to be made of how many called subscribers (1) listened to the entire message, (2) hung up before the message was completed and (3) failed to pick up the receiver. Counters **71–73** respond to the trailing edges of the output pulses of inhibit gates **64–66** since only the trailing edges indicate which one of the three possible events took place for a particular called subscriber.

To these ends, set input terminals (S) of flip-flops **61** and **62** and a start input terminal of timer **63** are driven in parallel by the output signal of stage nine of shift register **21.** The output signal of stage nine drives flip-

visited 2/18/2020

flops **61** and **62** so that the flip-flops derive binary one signals at the set output terminals (Q) thereof until pulses are applied to the reset input terminals thereof. In contrast, the state of timer **63** is not altered by an output of stage nine until the timer period has elapsed (25 seconds), at which time a pulse on the order of one second is derived, unless the timer has been stopped. Reset input terminal (R) of flip-flop **61** is connected to be responsive to the end of message signal derived from terminal **17** of recorder **14**, while the reset terminal (R) of flip-flop **62** is connected to be responsive to an output signal derived from trailing edge detector **74** that has circuitry substantially the same as that of leading edge detector **57**, except for reversal of the diode polarity. Thereby, flip-flop **61** is activated to the binary one state from the time a binary one level is derived from stage nine of shift register **21** until the tape of recorder **14** has completed one cycle, while flip-flop **62** is in the binary one state from the time a binary one is derived from stage nine of shift register **21** until the called subscriber hangs up his receiver.

Timer **63** includes a stop input terminal, which when activated stops the timer and resets it to zero. Hence, a pulse is derived from timer **63** only if there is a 25 second interval between the time a pulse is applied from stage nine to the timer start input terminal and a pulse is applied to the stop input terminal of the timer. To prevent an output pulse from being derived from timer **63** when the called subscriber picks up his receiver, the stop input terminal of the timer is connected to be responsive to the output of leading edge detector **57** by a connection established through OR gate **75**.

To enable only one of flip-flops **61** or **62** or timer **63** to derive a binary one level in response to each called subscriber being dialed, and thereby enabling only one of counters **71–73** to be activated for each called subscriber, a feedback circuit is provided between the outputs of the flip-flops and timer and the reset inputs of the flip-flops and the stop input terminal of the timer. The feedback circuit includes NOR gate **76**, having inputs responsive to the set output terminals (Q) of flip-flops **61** and **62**. NOR gate **76** drives one input terminal of OR gate **77**, having a second input terminal responsive to the output signal of timer **63**. Thereby, a binary one level is derived from OR gate **77** in response to either of flip-flops **61** or **62** being activated to the reset state or timer **63** generating an output pulse. Leading edge detector **80** is connected to be responsive to the output of OR gate **77** to generate a pulse in response to the output of the OR gate going from a binary zero to a binary one level. The pulse is substantially in time coincidence with: (1) the completion of the 25 second interval as derived from the output of timer **63**, (2) the premature hanging up by the called subscriber, as derived by the output of flip-flop **62**, or (3) the termination of the prerecorded message with the called subscriber listening to the entire message, as indicated by the output of flip-flop **61**, whichever one of the three is appropriate. Detector **80** derives an output signal that is coupled to the stop input terminal of timer **63** through OR gate **75** and to inhibit input terminals of inhibit gates **78** and **79**, respectively connected to the reset input terminals (R) of flip-flops **61** and **62**.

The circuitry including flip-flops **61-62**, timer **63**, OR gates **75** and **77**, NOR gates **76** and inhibit gates **78** and **79** and detector **80** operates as follows. The binary one signal from stage nine of shift register **21** sets flip-flops **61** and **62** and initiates the operation of timer **63**. Thereby, flip-flops **61** and **62** derive binary one output signals, while no pulse is derived from timer **63**. If the called subscriber does not pick up his receiver within 25 seconds, a pulse is derived from timer **63**, actuating counter **73**, and is coupled through OR gate **77** to cause a pulse to be derived from detector **80**. The pulse output of detector **80** is coupled to the inhibit terminals of inhibit gates **78** and **79**, thereby preventing resetting of the flip-flops in response to the next output of OR gate **77**. If the called subscriber picks up his receiver prior to completion of the 25 second period of timer **63**, a binary one signal is derived from leading edge detector **57** and coupled through OR gate **75** to the stop input terminal of timer **63**, thereby preventing a pulse from being derived from the output of the timer whereby counter **73** is not activated.

When the answering called subscriber hangs up before the message is completed a pulse is derived from trailing edge detector **74** and coupled through gate **79** to the reset input terminal of flip-flop **62**. Thereby, flip-flop **62** is activated to the reset state and hang up counter **72** is incremented by a count of one. In response to flip-flop **62** being activated to the reset state, a binary zero level is applied to one input of NOR gate **76**, whereby the NOR gate derives a binary one output that is coupled through OR gate **77** to leading edge detector **80** that derives a pulse which is fed to the inhibit terminals of inhibit gates **78** and **79**, and through OR gate **75** to the stop terminal of timer **63**. Thereby, flip-flops **61** and **62** are respectively maintained in the set and reset states until the next number is called, at which time a binary one level is derived from stage nine of shift register **21**, causing both flip-flops to be driven back to the set state.

Next assume that the called subscriber answered his receiver and listened to the entire prerecorded message transmitted over telephone line **15** from tape recorder **14**. In such an event, an output pulse is derived from end of message terminal **17** of tape recorder **14** prior to the derivation of a pulse from trailing edge detector **74**. In response to the end of message pulse being derived from terminal **17**, flip-flop **61** is reset, resulting in a binary one being derived at the output of NOR gate **76** and being coupled to the output of OR gate **77**. The binary one at the output of OR gate **77** is supplied to detector **80** that generates a pulse that is supplied in parallel to inhibit inputs of gates **78** and **79**, as well as one of the inputs of OR gate **75**. Thereby, flip-flops **61** and **62** remain respectively activated in the reset and set states and timer **63** remains deactivated until the next subscriber number has been called and a binary one is again derived at output stage nine of shift register **21**. Counter **71** is incremented in response to flip-flop **61** being driven to the reset state and neither of the counters **72** or **73** is incremented since there can be no change in state of the circuits driving them until after the next subscriber call is placed.

In response to a binary one output being derived from detector circuit **80**, the phone at the local station is repeatedly disconnected from and connected to line **15**, i.e., hung up and picked up, until a dial tone is detected and the entire cycle of tape recorder **14** has been completed. The repeated hanging up and picking up of the local phone is attained with circuit **13** which includes a feedback loop including electro-mechanical timers **82** and **83**, preferably having timing periods of five seconds and two seconds, respectively. Timer **82**

visited 2/18/2020

derives a 5 second binary one output pulse in response to a binary one being applied to its input, while timer **83** derives a short duration pulse 2 seconds after a binary one is applied to its input.

The input of timer **82** is responsive to the output of leading edge detector **80**, as coupled through OR gate **89**, to initiate the repeated hang up and pick up cycle. The 5 second output pulse of timer **82** is applied to coil **84** of relay **85**, having normally closed contacts **86** which are connected to the tip and ring lines of telephone line **15**. In response to the 5 second output pulse of timer **82**, coil **84** is energized, opening contacts **86** and thereby disconnecting the local phone from line **15** for 5 seconds. Upon completion of the 5 second interval of timer **82**, a binary zero output of the timer results in de-energization of relay **84** and closure of contacts **86**, thereby connecting the local phone to line **15**. If the local phone is not able to detect a dial tone on line **15** or an end of message pulse is not derived from lead **17** within 2 seconds after closure of contacts **86**, contacts **86** are again open circuited and the local phone is again effectively hung up.

To detect when the local phone is reconnected to telephone line **15** and to enable the local phone to be connected to the line for at least 2 seconds, the output signal of timer **82** is coupled to trailing edge detector **87** which derives a relatively short duration binary one pulse in response to the output of timer **82** going from a binary one to a binary zero level. The output pulse of detector **87** is applied to timer **83**. If a dial tone is not detected by detector **92** and the cycle of recorder **14** has not been completed, the pulse derived from timer **83** is coupled through inhibit gate **88** and OR gate **89** back to the input of timer **82**. Timers **82** and **83** and contacts **86** are repeatedly activated in this manner until a dial tone on line **15** is detected and the cycle of recorder **14** has been completed. At that time, a binary one signal is derived from inhibit gate **91** to prevent the output of timer **83** from being fed back to the input of timer **82**, causing the hang up - pick up cycle to be terminated.

To enable a binary one output to be derived from inhibit gate **91** in response to a dial tone being detected and the message on recorder **14** being completed, dial tone detector **92** is provided and connected to the tip or ring line of telephone line **15**. Dial tone detector **92** is preferably a bandpass filter capable of passing any dial tone frequency, typically between 300 and 900 Hertz. The bandpass filter drives an audio detector which derives a binary one while any dial tone frequency is on line **15**. The binary one output level of detector **92** is coupled through inhibit gate **91** only when the present message of recorder **14** has been completed. The binary one output of detector **92** is not coupled through inhibit gate **91** while the message of recorder **14** is being applied to the phone line **15** because the message may include audio frequencies that are the same as the dial tone, and to avoid placing a call to the next subscriber until after recorder **14** has completed a message cycle. To prevent the output of detector **92** from being coupled through gate **91** until the message of recorder **14** has been completed the set output terminal (Q) of flip-flop **58** is applied to the inhibit terminal of gate **91**.

In response to a binary one output of inhibit gate **91**, inhibit gate **88** is disabled, as indicated supra, to prevent further hanging up and picking up of the local telephone to telephone lines **15**. The local telephone remains connected to lines **15** since relay **84** cannot be activated until a pulse is again derived from leading edge detector **80**. A binary one output of inhibit gate **91** also enables AND gate **93** that is responsive to the output of 2 second timer **83**.

In response to an output signal of timer **83** while a binary one output is derived from inhibit gate **91**, AND gate **93** applies a binary one signal to a reset input terminal (R) of flip-flop **25** via OR gate **26**, thereby enabling the output signal of free running multivibrator **24** to be applied to the clock input terminal **22** of shift register **21** to repeat the cycle.

Reference is now made to FIG. **2** of the drawing wherein there is illustrated a circuit diagram of a modification of the FIG. **1** system, enabling dialing pulses to be generated instead of touch tones. In the dialing pulse generator, each of the seven digits is represented as a series of dialing pulses, rather than as a tone. The dialing pulse generator includes a four stage count down counter **101** having a load input terminal **102** which, when actuated, causes the four bit binary coded decimal signal on leads **51–54** (FIG. **1**) to be loaded into the four stages of the counter. Counter **101** includes a clock input terminal **103** which decrements the count of the counter one each time a pulse is applied thereto. Counter **101** includes an output terminal **104** on which is derived a binary one signal in response to the count of the counter being reduced to zero.

Counter **101** is loaded with the four bit binary coded signal on leads **51–54** each time shift register **21** is activated to a different one of stages **1–7**. To this end, the output leads of stages **1–7** of shift register **21** are respectively connected to leading edge detectors **105**, one of which is provided for each of the seven stages. The output voltages of leading edge detectors **105** are supplied to OR gate **106** which thereby derives a binary one output signal approximately in synchronism with each stage of shift register **21** being initially reached. The output of OR gate **106** is coupled to load input terminal **102** of counter **101** via one shot **107** which slightly delays the derivation of a binary one signal from OR gate **106**, to prevent possible false coupling of a load signal into counter **101**.

In the interval between loading of counter **101** and the derivation of a binary one signal at output terminal **104**, the circuit of FIG. **2** derives a number of dialing pulses equal to the count of the binary coded decimal signal loaded into the counter. To sense the duration of the interval, the output of one shot **107** is applied to a set input terminal (S) of flip-flop **108** having a reset input terminal (R) connected to be responsive to the signal derived from terminal **104**. Flip-flop **108** derives a binary one output signal at a set output terminal (Q) thereof which is coupled to one input of AND gate **109**. AND gate **109** has a further input responsive to an output of fixed frequency, free running multivibrator **111**, having an output that is applied to clock input terminal **103** of counter **101** to decrement the count loaded into the counter. To enable count down of a maximum count of ten and simulation of telephone dialing pulses, the frequency of free running multivibrators **24** is appropriately changed from the one Hertz rate of FIG. **1** and the frequency of multivibrator **111** is set to equal that of dialing pulses of a rotary telephone dialer.

Dialing pulses from free running multivibrator **111** are coupled to telephone line **15** through AND gate **109** while flip-flop **108** is in the set state. The number

visited 2/18/2020

of dialing pulses coupled to line **15** from multivibrator **111** during each digit of a seven digit called number is equal to the digital value of the binary one coded signal coupled by leads **51–54** to the four stages of counter **101.**

The use of operational amplifier **56** in response to a polarity reversal is suitable only with certain telephone exchanges. At other exchanges, where cross bar or solid state switching is employed, polarity reversal is not used. At such exchanges it has been found that immediately prior to ringing, one or two pulses are derived; if there are two pre-ringing pulses, they are separated by approximately ninety milliseconds. The pre-ringing pulses are followed by another pulse when the called subscriber picks up his receiver and a further pulse is derived when the called subscriber hangs up his receiver. These pulses are of relatively high level, being approximately ten times the levels of a dial tone, a ringing pulse, a touch tone, or an audio message.

To enable detection of connect, disconnect and pre-ringing pulses, telephone line **15** is connected to one input terminal of operational amplifier **121** (FIG. **3**), having a second input responsive to a predetermined D.C. threshold voltage. Operational amplifier **121** normally derives a low level binary zero output signal, but is driven into saturation, to derive a binary one output signal, in response to the signal on line **15** having an amplitude commensurate with the pre-ringing, connect and disconnect pulses. In response to a dial tone, ringing pulse, touch tone or audio message, amplifier **121** remains in an unsaturated state and derives a binary zero level.

The output signal of operational amplifier **121** is connected to an input of one shot multivibrator **122** which generates a binary one pulse having a duration in excess of the time separation between a pair of pre-ringing pulses; e.g., the pulse duration is 150 milliseconds. Thereby, in response to either a pre-ringing pulse, or a pair of pre-ringing pulses, whichever is appropriate for the exchange to which the local telephone is connected, one shot multivibrator **122** derives a single output pulse having a leading edge synchronized with the first pre-ringing pulse and a duration of 150 milliseconds. In response to each of a connect and disconnect pulse being received on line **15,** one shot **122** derives a 150 millisecond binary one output signal. Thereby, in response to a complete cycle of ringing, call completion and call disconnect, three and only three pulses are derived from one shot **122.**

To enable detection of the called subscriber receiver being connected to and disconnected from the telephone line, the output of one shot **122** is applied to a trigger input terminal (T) of flip-flop **123,** as well as to inputs of AND gates **124** and **125** which respectively drive trigger inputs (T) of flip-flops **126** and **127.**

Flip-flops **123, 126** and **127** are interconnected with each other and the outputs of one shot **122** and AND gates **124** and **125** so that flip-flop **126** is in a binary one state during the entire time while the called subscriber receiver is connected to the telephone line, while flip-flop **127** is in a set state from the time that the called subscriber hangs up his receiver to the time a binary one signal is derived from detector **80,** FIG. **1.** To these ends, the output of flip-flop **123** is connected to one input of AND gate **124** and the output of flip-flop **126** is connected to one input of AND gate **125.** Flip-flops **123, 126** and **127** are responsive to the trailing edges of the output of one shot **122.** The three flip-flops include reset input terminals (R) which are connected to be responsive to the output of leading edge detector **80** so that all three of the flip-flops are in a binary zero state prior to a call being placed to each called subscriber.

Immediately prior to the receiver of the called subscriber having ringing pulses supplied thereto, flip-flop **123** is driven from the reset to the set state in response to the output of one shot multi-vibrator **122.** Setting flip-flop **123** enables AND gate **124** so that when the called subscriber picks up his receiver and is connected to the line, the output pulse of one shot **122** is coupled through AND gate **124** to the toggle input of flip-flop **126,** causing flip-flop **126** to be driven from the reset to the set state and disabling AND gate **125.** In response to one shot **122** sensing a connection to the called subscriber, flip-flop **123** is returned to the reset state, thereby diabling AND gate **124.** In response to the called subscriber hanging up his receiver and disconnecting his receiver from the line, one shot **122** derives a further binary one signal that is coupled through AND gate **125** to the toggle input of flip-flop **127,** thereby changing the state of flip-flop **127** from the reset to the set state. The output pulse of one shot multivibrator **122** derived in response to the disconnect pulse on line **15** causes flip-flop **123** to be driven from the reset to the set state, but has no effect on the state of flip-flop **126** because the time required for flip-flop **123** to be reset is such that the trailing edge of the one shot **122** terminates prior to AND gate **124** being enabled.

The ring detection circuit of FIG. **3** is utilized in conjunction with the apparatus of FIG. **1** by connecting the output of flip-flop **126** to leading edge detector **57.** The output of flip-flop **127** is connected to a leading edge detector **128** which senses transitions from a binary zero to a binary one state of flip-flop **127** and is utilized in place of trailing edge detector **74,** FIG. **1.**

While there has been described and illustrated one specific embodiment of the invention, it will be clear that variations in the details of the embodiment specifically illustrated and described may be made without departing from the true spirit and scope of the invention as defined in the appended claims. For example, the incremental dialing system wherein the number is changed by a fixed amount can be replaced with a prerecorded sequence of called numbers. Also, a pair of tape recorders can be provided, one for transmitting messages and a second for receiving short duration responses from called subscribers. The apparatus can also be provided with timers for automatically controlling the time of day during which calls are placed. In accordance with a further modification, the counts stored in frequency dividers **34–37** can be detected and compared against a maximum count which, when reached, causes an alarm to be activated and inhibits the enabling of AND gate **123** so that subscribers will not be repetitively called. Also, endless loop tape recorder **14** can include two tracks, one for the audio message and the second replacing the foil for control functions. On the control track, predetermined frequencies can be provided, with a first predetermined frequency indicating the completion of a message, causing the tape drive motor to stop. A few seconds prior to the "completion of message" frequency the control track can include a second frequency, distinguishable from the completion of message frequency, and indicating that the message is about to be com-

visited 2/18/2020

pleted. The "about to be completed" frequency can be detected and coupled to output terminal **17** so that if the called subscriber hangs up slightly before the message is completed the completed call counter **71**, rather than hang up counter **72**, is actuated.

What is claimed is:

1. Apparatus for automatically supplying a prerecorded message to a plurality of telephone subscriber stations in sequence comprising means for placing a telephone call to a telephone number, means for coupling the message to a telephone line in response to the called number being reached, counter means for storing the number to be called, means for incrementing the counter means by the same predetermined number to change the telephone number by a predetermined number to derive another number, and means responsive to the call being either completed or an indication of the called number being incapable of being reached for again activating the means for placing a call to the another telephone number; the means for placing, means for coupling, means for incrementing and means for again activating being repeatedly activated so that calls are automatically placed in sequence to a plurality of subscribers.

2. The apparatus of claim **1** wherein the counter means comprises a plurality of cascaded 10-stage frequency dividers, one of said dividers being provided for and storing the numerical value of a digit of a called subscriber number, whereby the plural dividers store plural digits of the called subscriber station number, means for incrementing the divider for the least significant bit once each time a number is called, a telephone dialing means, and means for supplying the stored digits of the dividers to the dialing means in sequence.

3. The apparatus of claim **1** wherein the counter means comprises: a shift register, an oscillator for advancing the shift register so that different shift register stages are activated in sequence, means for storing binary signals representing the digits of a called subscriber number, said means for storing for at least some of the digits comprising a plurality of cascaded 10-stage frequency dividers, telephone dialing means, gate means for selectively coupling the stored signals for each digit in sequence to the dialing means in response to different stages of the shift register being activated, and means for advancing the count of the frequency divider for the least significant digit by a count of one in response to a further one of said stages of the shift register being activated.

4. Apparatus for automatically supplying a prerecorded message via a telephone line to a plurality of telephone subscriber stations in sequence, said line applying pulse-type signals to the apparatus in response to an operator at a called subscriber station connecting and disconnecting his station to the line, comprising means for placing a telephone call to a telephone number, means responsive to the pulse-type signals for deriving first and second signals respectively indicative of a connection being completed to the called subscriber station and the connection being broken at the called subscriber station, means for coupling the message to a telephone line in response to the first signal being derived, means responsive to the recorded message being completed for deriving a third signal, and counter means responsive to the second and third signals for indicating the number of connected subscriber stations that did not stay on the line for the entire message, means for deriving a fourth signal in response to a connection not being established to the called subscriber station a predetermined time after the call was placed, means for changing the telephone number by a predetermined number to derive another number, and means responsive to the occurrence of the third or fourth signals for again activating the means for placing a call to the another telephone number; the means for placing, means for coupling, means for changing and means for again activating being repeatedly activated.

5. The apparatus of claim **4** wherein the means for deriving the first and second signals includes means for detecting voltage changes and polarity reversals on the telephone line.

6. The apparatus of claim **5** wherein the detecting means includes a saturable amplifier having a grounded reference terminal and a pair of complementary input terminals connected to tip and ring lines of the telephone line.

7. Apparatus for automatically supplying a prerecorded message via a telephone line to a plurality of telephone line subscriber stations in sequence, said line applying pulse-type signals to the apparatus in response to an operator at a called subscriber station connecting and disconnecting his station to the line, comprising a dial tone detector for deriving an enabling signal in response to a dial tone on the line being coupled to the apparatus, means responsive to the pulse-type signals for deriving first and second control signals respectively indicative of the called subscriber station connecting and disconnecting his station to the line, means for deriving a third control signal in response to the prerecorded message being completed, means for deriving a fourth control signal in response to a called subscriber not connecting his station to the line a predetermined time after having been called by the apparatus, means for deriving a plurality of dialing signals for the subscriber stations to be called, control means responsive to the first, second, third and fourth control signals for supplying the enabling signal to the means for deriving the dialing signals so that the dialing signal for each subscriber station to be called is applied to the line in response to the enabling signal being supplied to the means for deriving dialing signals, means for changing the dialing signal from one subscriber station number to another subscriber station number after a previous subscriber station number dialing signal has been applied to the line, means responsive to the first signal for supplying the message to the line, the control means being repeatedly activated in response to at least one of the control signals so that a plurality of subscriber station numbers are called in sequence.

8. The apparatus of claim **7** wherein the means for deriving the first and second signals includes means for detecting voltage changes and polarity reversals on the telephone line.

9. The apparatus of claim **8** wherein the detecting means includes a saturable amplifier having a grounded reference terminal and a pair of complementary input terminals connected to tip and ring lines of the telephone line.

10. The apparatus of claim **7** wherein the control means includes: means responsive to the derivation of either the second or fourth signals for repeatedly connecting and disconnecting the dial tone detector to the line until the dial tone enabling signal is supplied to the means for deriving the dialing signals, and means for supplying the enabling signal to the means for deriving the dialing signals in response to the third control signal

visited 2/18/2020

being derived after the first control signal has been derived or in response to the fourth control signal being derived.

11. The apparatus of claim **7** further including counter means responsive to the second and third signals for indicating the number of connected subscriber stations that did not stay on the line for the entire message.

12. Apparatus for automatically supplying a prerecorded message via a telephone line to a plurality of telephone line subscriber stations in sequence, said line applying signals to the apparatus in response to an operator at a called subscriber station connecting his station to the line, comprising multistage shift register means for deriving a plurality of sequential output signals, N of said stages being provided for the N digits of each subscriber station number, means responsive to activation of said N stages for sequentially deriving each of the N digits of a subscriber station number and for applying the digits to the line to call a subscriber station number, means for changing the value of a digit of a subscriber station number in response to the shift register means being activated to a first stage other than the N stages, means for coupling the recorded message to the telephone line in response to the called station being connected to the line, means for deriving a first control signal in response to the prerecorded message being completed, means for advancing the shift register to a second stage other than the N stages after all of the digits of the called number have been applied to the line, means responsive to the register being in the second stage for a predetermined time and the called station not having been connected to the line for deriving a second control signal, and means responsive to the first and second control signals for energizing the shift register to activate the N stages and the first stage in sequence so that the digits for the changed subscriber station number are applied in sequence to the line and the subscriber station number is changed.

* * * * *

visited 2/18/2020

United States Patent [19]

Bernard et al.

[11] **Patent Number: 4,922,520**

[45] **Date of Patent: May 1, 1990**

[54] **AUTOMATIC TELEPHONE POLLING SYSTEM**

[75] Inventors: **John K. Bernard**, Pompano Beach; **Hunt K. Brand**, Lantana; **Richard L. Walker**, Boca Raton, all of Fla.

[73] Assignee: **M. A. Kempner, Inc.**, Deerfield Beach, Fla.

[21] Appl. No.: **304,704**

[22] Filed: **Jan. 31, 1989**

Related U.S. Application Data

[63] Continuation of Ser. No. 948,145, Dec. 31, 1986, abandoned.

[51] **Int. Cl.**[5] **H04M 1/276**; H04M 11/00

[52] **U.S. Cl.** **379/88**; 379/92; 379/97

[58] **Field of Search** 379/92, 88, 89, 67, 379/69, 87, 101, 97

[56] **References Cited**

U.S. PATENT DOCUMENTS

4,247,910	1/1981	Cornell et al.	364/900
4,320,256	3/1982	Freeman	379/73
4,406,925	9/1983	Jordan et al.	379/93
4,438,296	3/1984	Smith	379/69
4,451,700	5/1984	Kempner et al.	379/88
4,580,012	4/1986	Matthews et al.	379/245
4,599,493	7/1986	Cave	379/247
4,659,877	4/1987	Dorsey et al.	379/88

FOREIGN PATENT DOCUMENTS

0199255	12/1986	European Pat. Off.	379/89
0107756	6/1983	Japan	379/88

OTHER PUBLICATIONS

"Conversant 1 Voice System: Architecture and Applications", R. J. Perdue et al., *AT& T Technical Journal*, vol. 65, No. 5, Sept./Oct. 1986, pp. 34–47.

Primary Examiner—Thomas W. Brown
Attorney, Agent, or Firm—Joseph Zallen

[57] **ABSTRACT**

An efficient, easily-programmed and annoyance-free polling system includes the utilization of multiple voice synthesizers in multiple identical Telephone Interface Units (TIUs) operating independently under control of their own microprocessor, with the TIUs being connected to a bank of telephone lines. A Master Unit with its own voice synthesizer programs the TIUs for simultaneous polling and receipt of polled information. The voice synthesizer in the Master Unit is used for easy message editing and the elimination of "dead time". A personal or other computer is used for initialization, message set up and editing, telephone number generation, and cross-correlation and printing of polling results, with the TIUs working independently for simultaneously polling over many telephone lines. In one embodiment, programming of each individual TIU is accomplished through a specialized coding system unique to polling operations. In one embodiment branching occurs on a non-response or an erroneous answer for improved polling results. Message editing capability and trimming of the outgoing message is provided through the changing of the starting address and ending address of the message.

13 Claims, 5 Drawing Sheets

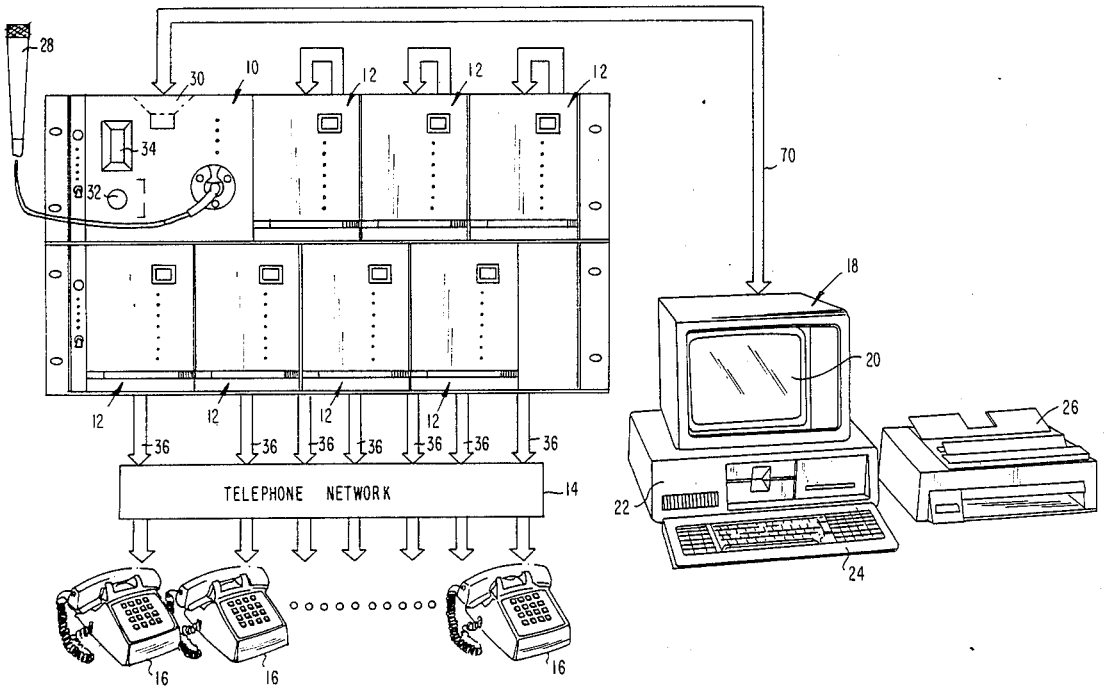

visited 2/18/2020

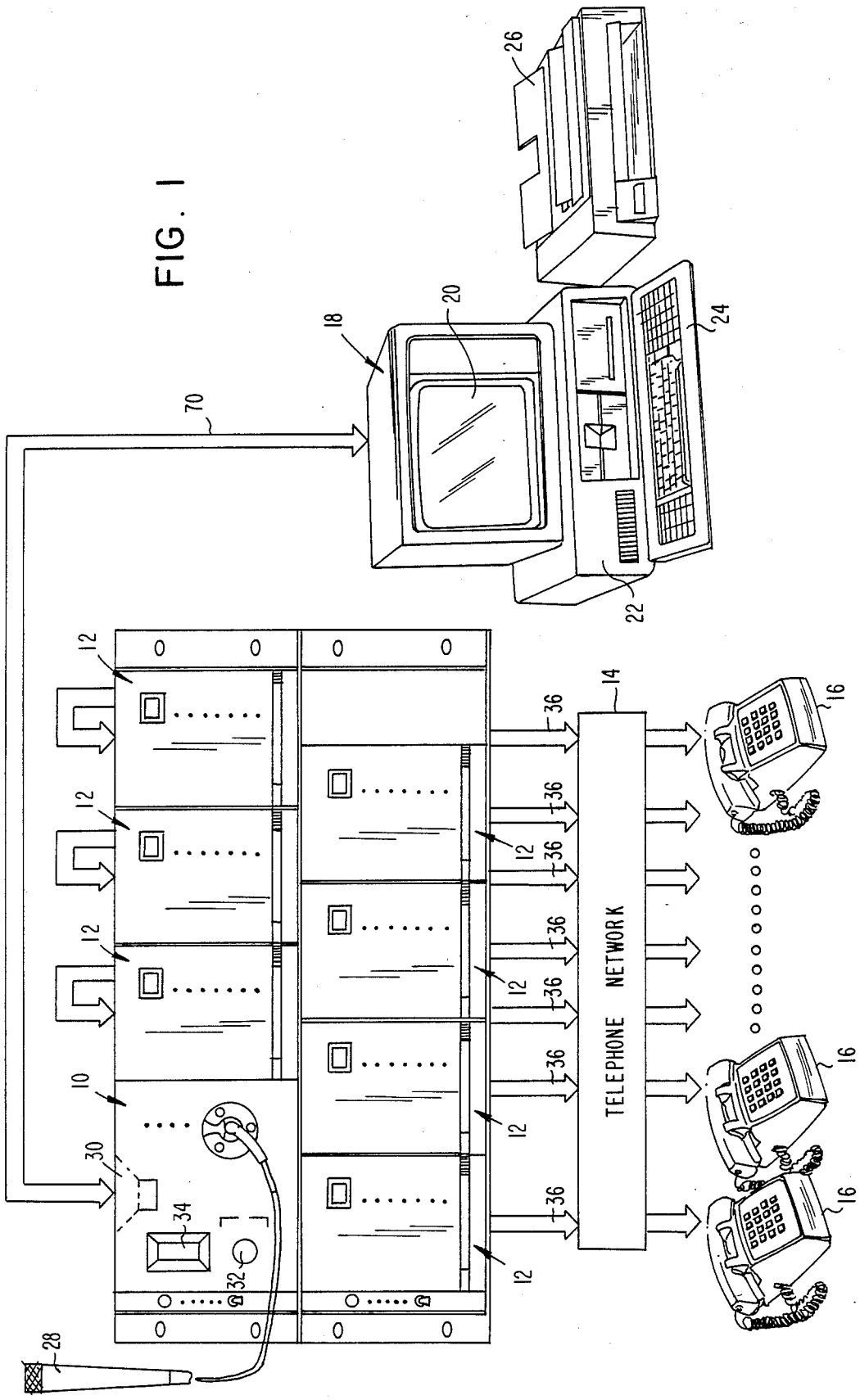

FIG. 1

visited 2/18/2020

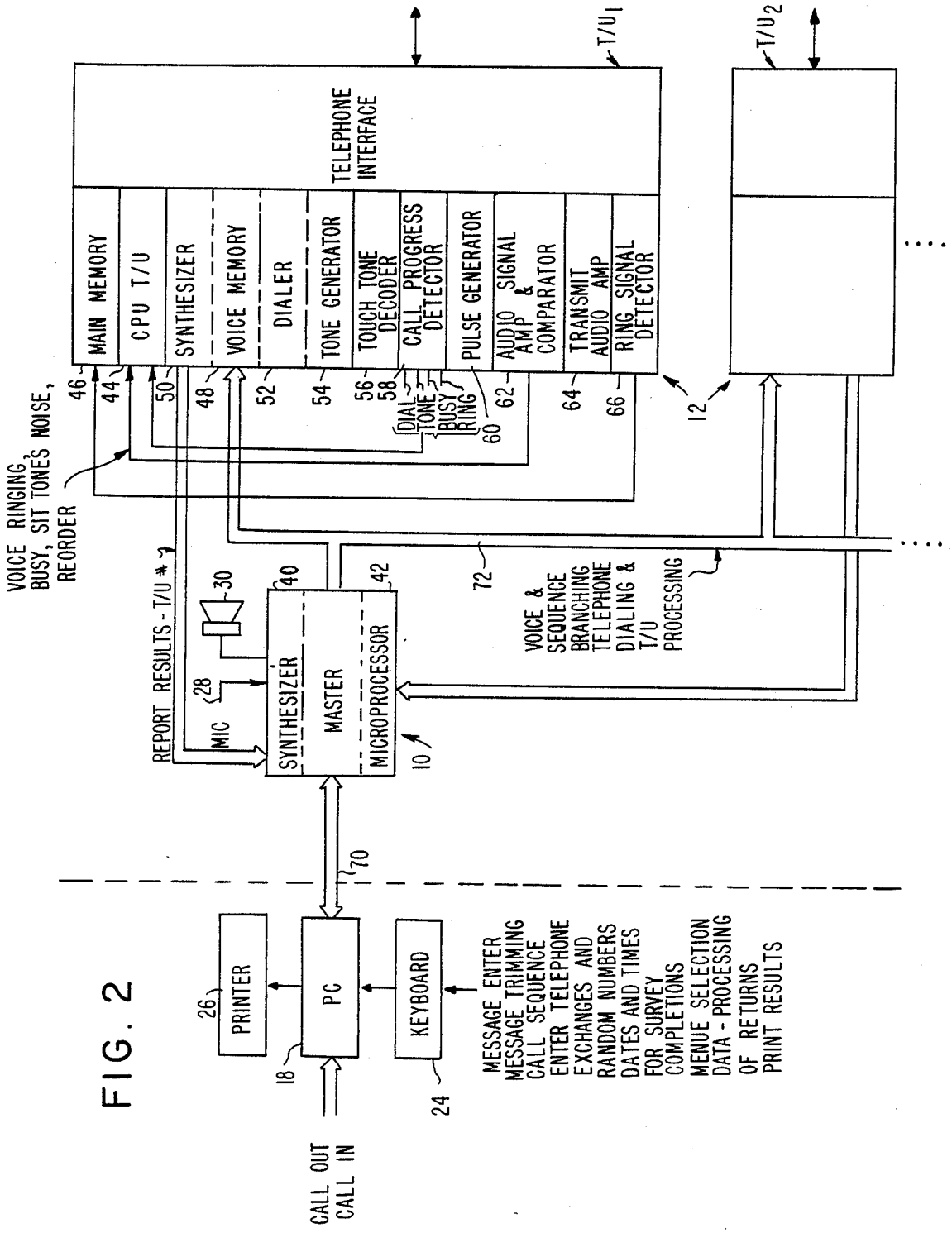

FIG. 2

visited 2/18/2020

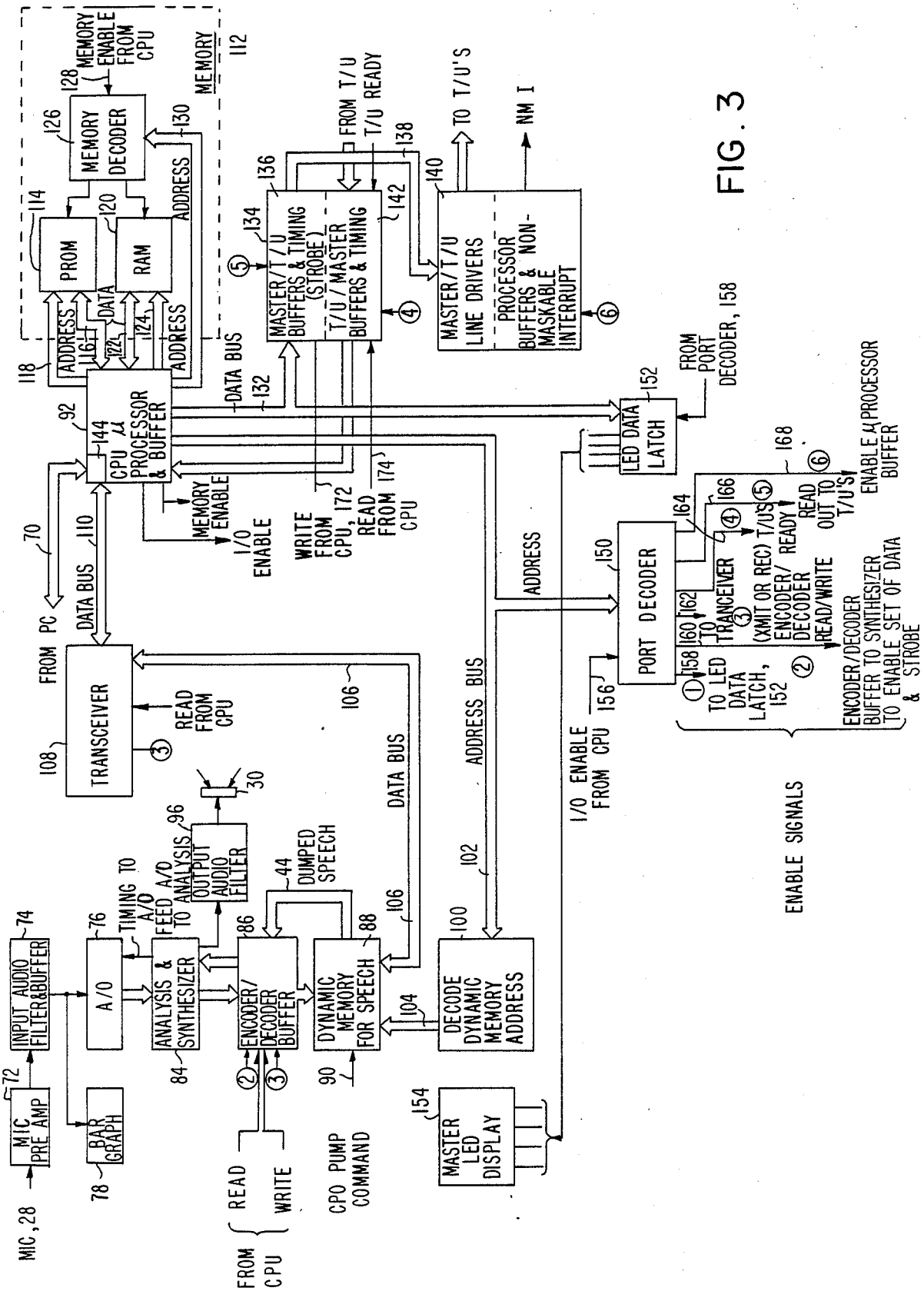

FIG. 3

visited 2/18/2020

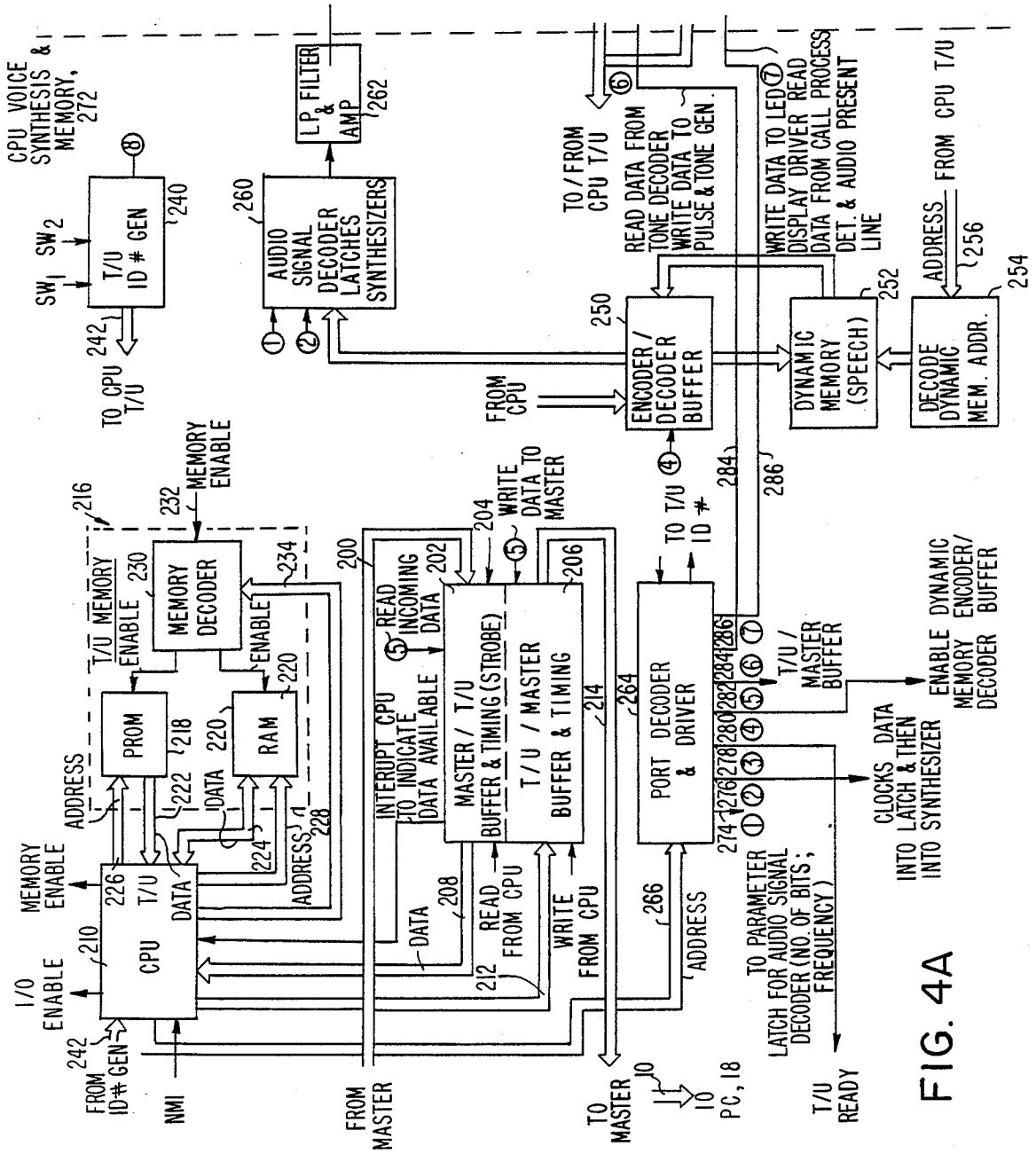

FIG. 4A

visited 2/18/2020

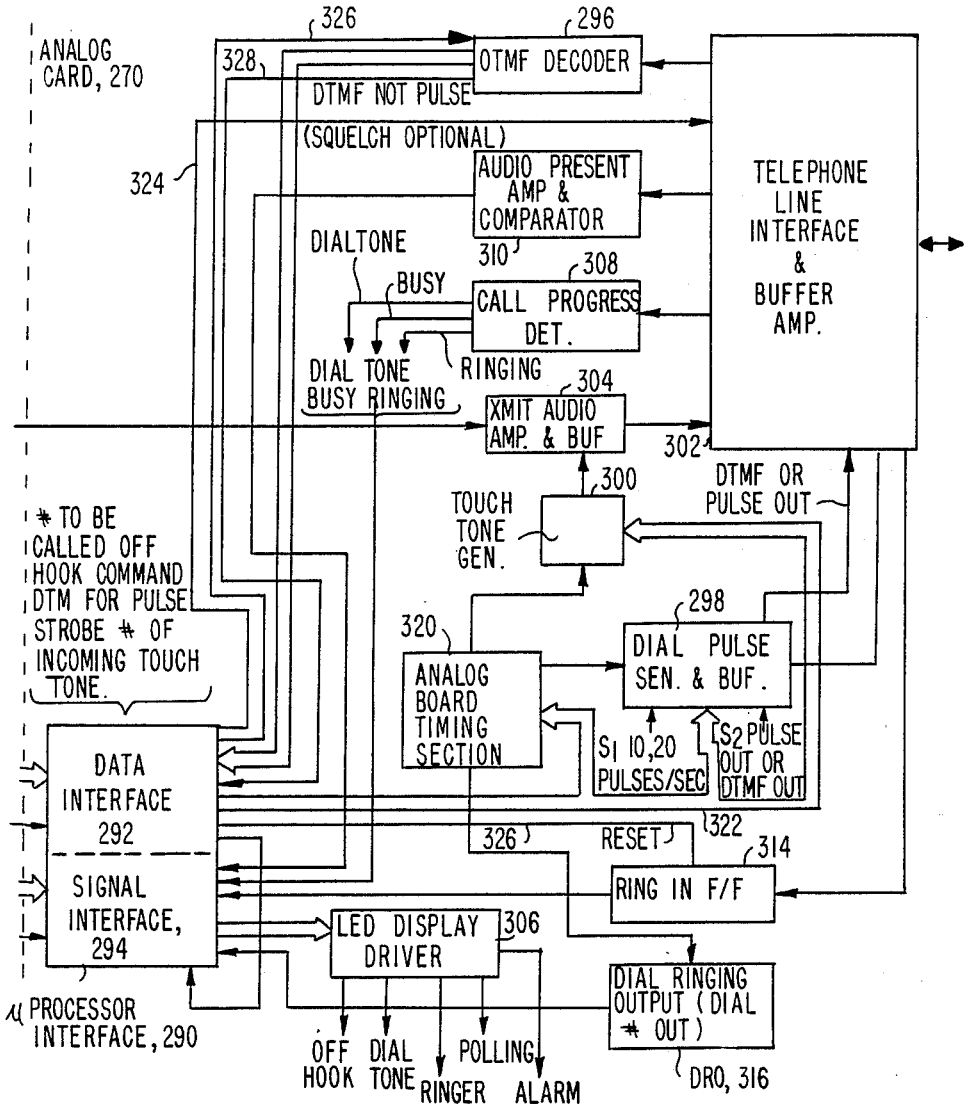

FIG. 4B

visited 2/18/2020

AUTOMATIC TELEPHONE POLLING SYSTEM

This is a continuation of application Ser. No. 948,145, filed Dec. 31, 1986, now abandoned.

FIELD OF INVENTION

The present invention relates to an improved system capable of automatically conducting a poll, survey or providing information via the public telephone network utilizing a synthesized human voice.

BACKGROUND

The number of Touch Tone (DTMF) and rotary public subscriber telephones in operation in the United States is pervasive. Consequently, extensive use has been made of these telephones to transmit both analog (e.g. voice) and digital (e.g. data) information. It is well known that the public telephone subscriber can obtain a wealth of information by dialing for a prerecorded message. Examples are numerous and include dialing for weather, time, sport scores, and stock quotations. Such examples do not require the use of a computer to store the information requested. Some call in only systems utilize a synthesized voice, with the latter capability being disclosed in U.S. Pat. No. 4,489,438. While this patent also describes multiple interface units, each connected to a different telephone line, each unit is under the control of the main computer at all times and does not operate independently.

Polls, however, require human operators either to ask questions or to gather responses. Pertinent general polling systems are exemplified by the U.S. Pat. Nos. 4,377,870; 4,345,315; 4,258,386; 4,151,370; 4,107,735; 3,950,618; 3,937,889; 3,909,536; 3,906,450; 3,891,802; 3,826,871; 3,794,922; 3,502,813; 3,456,192; 3,210,472; and 3,187,307. Further, the use of synthesized voices to conduct the polling and subsequent subscriber response, by his telephone keyboard or rotary dial, is disclosed in U.S. Pat. Nos. 4,451,700; 4,320,256; 4,084,081 and 3,644,675.

However, none of the above prior art reveals the combination of features provided by the present invention which include virtual simultaneous polling over any number of telephone lines through the use of multiple identical Telephone Interface Units (TIUs), operating independently once a telephone number is transmitted to the TIU by a Master Unit; the use of preselected telephone numbers, or partial random digit dial with predetermined three digit exchanges; the use of an on-site personal computer to generate messages, telephone numbers and cross-correlate polled data; the utilization of the same type voice synthesizers both in a Master Unit for programming the TIUs and in each TIU for simultaneous polling over individual telephone lines once the TIU is programmed by the Master Unit; a programming system having a code especially adapted to polling operations; reduction of "dead time" by specialized branching and by a convenient address-specified message editing; incoming signal recognition by circuitry and TIU programs that approximate an FFT analysis; recognition of a pulse or rotary dialing telephone at the dialed number and reconfiguration of the associated TIU to be able to receive responses from either pulse or DTMF dialers; the request of cooperation in a telephone survey of "X-length"; response by pressing certain numbers at the recipients telephone; call placing until a preset number of valid polls have

been attained; prevention of erroneous answers or silence from contaminating polling results; avoidance of having the poll recorded on a telephone answering machine; "call in"/"call out" convertibility; and the use of a personal computer with an associated printer to control initial message set up and editing, to keep track of results, to permit on-site cross-correlation of data and to permit on-site readout and printing for providing highly specific and cross-correlated polling results in near real time on an economical basis.

More specifically, through the increased utilization of polling systems, there has been an increased reluctance on the part of the recipient to answer the polling questions, be it human-generated, generated by tape, or generated by synthesized voice. Current polling systems usually utilize a single voice generating system, be it a tape or a voice synthesizer which must be accessed each time a question is to be asked, or the recipient's answer recorded. These types of systems are increasingly cumbersome because of the number of tape recorders or synthesizers that are necessary and in view of the fact that in most systems, only one outgoing telephone line can be accessed at a time. In the usual case, polling may take place over as much as 6 to 10 minutes, with the particular telephone line being tied up for this length of time. The systems which can only access one speech generator are incapable of doing simultaneous polling over numbers of outgoing telephone lines. Polling problems are exacerbated by virtue of the fact that most of the polling systems, unless manned by operators, are incapable of distinguishing the types of responses given by the recipient with any degree of accuracy such that the systems often misinterpret a ringing signal, a busy signal, a noise signal, silence, or a Touch Tone signal, and thereafter branch to the wrong type of message. Branching to the wrong type of message not only increases the annoyance of the recipient, but also decreases the accuracy of the poll and indeed reduces the credibility of the utilization of these types of systems in general.

One of the most annoying factors when utilizing an automatic polling system is the frequent use of telephone answering machines. There is nothing that annoys a recipient more than the recording of a polling message on a telephone answering machine. Presently, automatic polling systems cannot detect the fact that they are connected to telephone answering machine.

Other problems currently facing the pollster's use of automatic equipment revolves around the correlation of results which often must be manually entered into a different computer for processing. Current systems while able to keep track of answers to individual questions are not capable of on-site cross-correlation of results. What is therefore needed is a system which can correlate, for instance, the number of male users with the number of Caucasians, with the number of answers, as to whether the person is a Democrat or Republican, along with a correlation as to age and a correlation as to geographic area.

It will be noted that the most accessable method of correlation to geographic area is the telephone exchange. Thus, a system which is capable of programming exchanges ahead of time results in a system capable of analyzing polling results on an area by area basis in real time.

The economical utilization of automatic polling systems also is dependent upon obtaining valid responses and eliminating those responses which are not valid.

visited 2/18/2020

Not only does the elimination of non-valid responses permit more efficient use of the equipment so that the polling can take place more quickly, the contamination of the polling results with non-valid response is indeed an important feature not immediately available in present day equipment.

Importantly, the most economical method of polling is the ability to be able to use a multiplicity of outgoing telephone lines in such a manner that simultaneous polling can be achieved over a number of telephone lines, so that the entire poll can be conducted over a relatively short and specifically designated period of time. Moreover, the speed with which the polling can take place, rather than being dependent upon polling over a given length of time, is preferably a polling system which shuts down after a predetermined number of valid answers have been received in a given area. The system should also be actuated only over a predetermined time period such as at night after recipients are usually in their own homes.

Finally, it is very important to be able to readily encode messages and provide for multiple type of branching based upon the answers given, with a minimum amount of "dead time" so that the recipient has very little opportunity to hang up. Messages must be appropriate, easily edited, and "natural sounding", so that a natural sounding message is transmitted, with "dead time" between the initial message and any following messages being virtually eliminated The importance of the elimination of "dead time" cannot be overemphasized in view of the fact a recipient given even a small amount of "dead time" may feel embarrassed about answering a "computer's" questions and hang up the telephone, as opposed to being encouraged to answer the poll.

SUMMARY OF THE INVENTION

In order to provide for less-annoying, easily programmable, and a more efficient polling system, the Subject System automatically conducts a scientific public opinion poll. This system utilizes a synthesized human voice to poll individual public telephone network subscribers, then stores and analyzes their telephone responses from either a Touch Tone keyboard or rotary dial, in near real time to cross-correlate poll results in the form of a computer printout. The system consists of a number of major parts, including a personal computer with keyboard and printer, a Master Unit having a microprocessor and voice synthesizer, and a group of identical Telephone Interface Units (TIUs), each having the same type of synthesizer and microprocessor as the Master Unit. Moreover, each TIU includes special circuitry to place and receive calls and to recognize the types of signals from the recipient's telephone. Under control of the personal computer, the digitizer and microprocessor in the Master Unit both initialize all the TIUs with messages and interface the personal computer via a RS232 serial port with the TIUs. The personal computer, used to control the system, provides operator input and output and produces graphic printouts of the subscriber-keyed responses. The analog-to-digital converter in the Master Unit converts analog audio to digital signals for transmission to each TIU dynamic random access memory (DRAM), one TIU being required for each line used for the polling. The Master Unit also governs the transfer of data to and from the personal computer. Finally, the TIUs are connected to the public telephone network via a specialized analog card to establish calls, to monitor call progress, to provide synthesized audio messages, to detect DTMF and dial telephone responses, and to provide status and results to the Master Unit for computation by the personal computer.

The subject is thus an efficient easily-programmed and non-annoying polling and data aquisition system which includes, either singly or in combination, the utilization of identical voice synthesizers in a polling system for quick branching and easy message editing, as well as for the elimination of "dead time"; the provision of unique formatting or coding systems for ease of message formatting and results in retrieval in which the number of numbers dialed back, specific numbers dialed back, or numbers within a given set of numbers dialed back can be selected; branching to a new message set if a pulse dialed telephone is reached; the use of a personal or other computer for initialization, message set up and editing, telephone number generation, and on-site response cross-correlation and printout; and, the use of a Master Unit as an interface to a number of identically-configured Telephone Interface Units, each once initialized, operating virtually independently for simultaneous polling and receipt of information over a number of telephone lines, once telephone numbers have been inputted into the particular TIUs from the personal computer. The personal computer and Master Unit are also provided with a token-passing system to ascertain the identity of a particular TIU and its condition as to whether it is to receive a telephone number or dump its stored received responses back to the personal computer for analysis. Utilization of multiple TIUs permits simultaneous or near-simultaneous polling, with the only time that the TIU is dependent on the personal computer being the time that a particular telephone number is inputted into its memory and the time it dumps its information back through the Master Unit to the personal computer.

Programming of each individual TIU is accomplished through the Master Unit which simultaneously programs all TIUs with particular message and branching sequences. The use of the same type of voice synthesizers in each TIU and the Master Unit permits random access and branching, as well as editing capability for the elimination of "dead time" in telephoning, thereby to minimize annoyance of the recipient and consequent non-response. Branching without the use of a single source of voice messages, such as multiple tape recorders or a single all-purpose synthesizer, permits flexibility through the utilization of individual voice synthesizers and independent computer control within each TIU.

On-line computer cross-correlations permit generation of highly tailored statistics from the responses, as opposed to mere tallies of results, to provide demographic or other profiles, which cross-correlated statistics are available in printed form from the personal computer's printer on a timely basis.

Branching is aided by a unique inexpensive equivalent to a spectrum analyzer which analyzes the incoming signals to ascertain a ringing condition, a busy condition, a voice condition, a noise condition and recipient silence. This is accomplished by clipping the incoming signal so that it provides pulses and then determining the type of signal that is coming in by detecting the time difference between rising edges of adjacent pulses, with correlations of the spectral content of the incoming signal in different frequency channels being utilized to further ascertain with a high degree of accuracy the type of incoming signal. This unit is also utilized to

visited 2/18/2020

detect the presence of a tape recorder at an answered telephone by the detection of continuous voice over a predetermined period of time, usually eight seconds, at which point the system hangs up rather than leaving a lengthy message. This eliminates annoyance of polling messages recorded on home telephone answering machines. This spectrum analyzer hybrid also permits the utilization of expanded criteria for branching by permitting the ignoring of noise transients.

Branching decisions are based on answers, with branching to another sequence on a non-response or an erroneous answer being important because it prevents contaminating the polling with erroneous answers. A Dual Tone Multiple Frequency (DTMF) detector is utilized to detect answers from so-called Touch Tone or DTMF systems, whereas a specialized system is utilized for rotary or pulse dialers in which noise introduced via long distance telephone networks is discriminated against through the asking of a recipient to dial a particular number and measuring the time duration of the noise generated during the pulse-dialed response. Other pulse-dialed numbers are then detected by virtue of the existence of the same type of noise over a predetermined multiple or fraction of the time period of the noise generated by the original pulse-dialed number. Thus, pulse dialing of a recipient's telephone is detected in one embodiment through detection of a number of noise pulses within a predetermined time period followed by a predetermined silence. In summary, due to the noisy nature of pulse dialing, the subject system in one embodiment detects a certain pattern of noise "hits" in a period to ascertain the numbers from pulse dialing telephones.

Programming of the speech synthesizer in the Master Unit is accomplished during an initialization procedure to provide "natural speech", with the method of speech synthesis also providing editing capability and trimming of the outgoing message through the changing of the starting address and ending address of the message.

Polling in telephone groupings in which the first three digits are selected for given exchanges, followed by four random numbers permits convenient fast designation of polling areas, as well as an efficient means of generating random telephone numbers with given exchanges. This feature also assists cross-correlation.

Moreover, in one embodiment, the system is inactivated after compiling a predetermined number of responses which are determined to be valid, with the system also being programmable not to call out during certain periods during the day, or to be programmed to call out only during certain periods of the day.

Finally, "call in"/"call out" convertibility permits the system to be configured either in the normal polling system configuration in which numbers are randomly dialed, messages given, and results cross-correlated; or a dial-in system is provided in which no telephones are dialed. This is accomplished through the utilization of the storage associated with the aforementioned TIUs, and a detector which detects when a TIU is receiving an incoming telephone call.

BRIEF DESCRIPTION OF THE DRAWINGS

These and other features of the Subject Invention will be better understood taken in conjunction with the Detailed Description and the Drawings of which:

FIG. **1** is a diagramatic representation of the subject system illustrating the utilization of a personal computer, a keyboard, and associated printer, along with a rack containing a Master Unit and a number of Telephone Interface Units connected to a telephone network and thence to individual recipient telephones;

FIG. **2** is a block diagram illustrating the Subject System in which the elements of FIG. **1** are described in more detail, including a further functional description of each individual Telephone Interface Unit of FIG. **1**;,

FIG. **3** is an expanded block diagram of the Master Unit of FIGS. **1** and **2**;

FIG. **4A** is a block diagram of the CPU, voice synthesizer and memory for each of the Telephone Interface Units of FIGS. **1** and **2**;

FIG. **4B** is a block diagram of the analog circuitry utilized in the Telephone Interface Units of FIGS. **1** and **2**.

DETAILED DESCRIPTION

Referring now to FIG. **1**, the subject polling system in general includes a Master Unit **10** and a number of Telephone Interface Units **12**, each of which is individually connected to a different line in a telephone network **14**, which in turn routes each individual TIU to an individual telephone **16**. Master Unit **10** is driven by a computer **18**, in a preferred embodiment, a personal computer which has, as is usual, a display **20**, a memory and processing unit or CPU **22**, a keyboard **24** and optionally a printer **26** for printing out cross-correlated polling results.

The polling system in general works basically in two modes of operation. The first mode of operation is the "call out" mode in which exchanges are automatically dialed through the programming of the personal computer which routes the telephone numbers through the Master Unit to a "free" TIU to dial out the particular number. The personal computer generates telephone numbers in accordance with a predetermined sequence or a predetermined set of exchanges, plus randomly generated four digit numbers. The "call out" mode is utilized to ascertain information from the recipient through the utilization of a synthesized voice and cueing system which is programmed into the Master Unit by virtue of computer **18**.

This initial programming is transferred to each TIU such that each TIU operates independently once having been programmed by the Master Unit, and once having received a telephone number to be dialed. The Master Unit therefore serves the function of initializing all of the TIUs by synthesizing the voice messages to be transmitted, ordering the messages, and providing the branching instructions upon receipt of responses by the recipient or incoming signal type. The Master Unit then serves the function of routing to the TIUs the telephone numbers to be dialed and routing to computer **18** via an RS232 interface, the information obtained through the polling such that cross-correlation can be performed by computer **18** and then printed out via printer **26**.

Thus, unique to this system is the utilization of a Master Unit to synthesize the voice to be transmitted via microphone **28**, editing of the messages to be transmitted, and the instantaneous replay of the messages prior to the programming of the TIUs via an internal speaker, here illustrated in dotted outline by reference character **30**. The volume of the recorded message is controlled via a front panel control knob **32** and the level thereof is adjusted in accordance with a bar graph LED type display **34**.

It will be appreciated that each of the TIUs is connected to the telephone network via telephone lines **36**

visited 2/18/2020

such that the system can simultaneously poll large numbers of exchanges through the use of identically configured TIUs, each with its own synthesizer and microcomputer similar to those of Master Unit **10**. The use of the synthesized voice precludes the necessity of using a single synthesizer for the entire system, be it a tape or an electronic device. The use of identical synthesizers in each of the TIUs prohibits the results from the polling being skewed because a uniform polling voice is utilized. The packaging is, of course, much smaller than that which would be required when using multiple tape machines; and the ability to edit and access different messages is made considerably easier due to the ability to address the synthesizers both in the Master Unit and in the TIUs. Thus branching can occur without multiple tape recorders, with each of the synthesizers being addressable and independently controlled by the microprocessor in each TIU. As will be described, the utilization of the synthesizer and its associated memory permits editing through the utilization of start and end address specifications which reduce the amount of "dead time" in telephoning, such that the branching may be accomplished quickly.

Thus the utilization of a voice synthesizer and duplicate CPUs and memories in each of the TIUs permits virtual simultaneous polling, since, once provided with a telephone number, each Telephone Interface Unit can call out independently and separately on the telephone line without access to any main computer or any shared synthesizer or tape. The Telephone Interface Unit therefore accomplishes all of the functions necessary in polling, with the multiple Telephone Interface Units being both small in size, programmed initially by the Master Unit and left alone thereafter to perform the particular polling task.

As will be described, a specialized software-implemented spectrum analyzer is utilized to distinguish ring signals, busy signals, or noise to permit branching based on the type of signal that is detected. Moreover, software Fast Fourier Transform (FFT) detection of pulse dialing at a recipient's telephone, the presence of a telephone answering machine, or the presence or absence of voice, aids in the operation of the subject polling system and makes it both efficient and less-annoying for recipients.

Another feature of the subject invention is that branching based on answers is provided within each Telephone Interface Unit, which branching can be preprogrammed by computer **18** or can be a branch due to a nonresponse to a question or an erroneous answer. Branching on an erroneous answer is particularly important because is prevents contaminating the poll with erroneous answers. Thus the poll is a result of valid answers and assures more accurate results.

With respect to the programming of the speech synthesizer of the Master Unit, an analog-to-digital converter is utilized followed by a CPU and memory which in turn outputs message signals to a digital-to-analog converter which produces a natural sounding voice. This is important with respect to polling because of the uniformity of the voice utilized in the poll and because of the generation of "natural speech" which can duplicate the speech of any individual and therefore can be made to be recognizable. This is in contradistinction to computerized speech which would aggravate those being polled to the point that they may hang up. In the subject system an OKI model MSM5218RS is used.

Further, with respect to the use of the personal computer, the polling may take place in selected telephone groupings; with the first three digits being preselected for given areas, e.g. exchanges, and with the remainder of the numbers being generated in a random fashion to provide for the best random sampling possible.

As mentioned hereinbefore, trimming and editing of the outgoing message through the changing of the starting address and ending address, permits quicker access and effective trimming with less "dead time" which is objectionable to the respondent. Thus, with the subject trimming techniques, the results are professional-sounding messages which can be edited easily without a number of retakes.

Moreover, the entire polling system, while it can take place over a given time period can be inactivated after compiling a predetermined number of valid responses. Additionally, the system can be programmed not to call during certain periods of the day.

As a further feature, each of the TIUs includes a pulse dialing detector in software which detects numbers of signal pulses within a predetermined time period and a predetermined silence period, such that if there are the prescribed numbers of pulses and silence, it is assumed that pulse or rotary dialing has been utilized by the recipient. Since either a Touch Tone (DTMF) telephone or a pulse dialing telephone may be reached and since the Touch Tone telephone has more capability, it is important to know the type of telephone connected to a given TIU.

The subject system also has a "call in" feature which can be switched by software selections from the personal computer from the "call out" polling just described. For purposes of the subject invention, "call in" means that rather than accessing telephone network **14** with a sequence of either preprogrammed or randomly generated numbers, the system, in this mode of operation, receives the calls from individual network users. These individual calls are routed to "free" TIUs, at which point the function of the TIU is identical to the "call out" functions described before. The telephone network selects which of the TIUs the incoming call is routed to and hunts for an unused or free TIU, with the TIU sensing incoming ring signals.

Referring now to FIG. **2**, as can be seen, computer **18** along with printer **26** and keyboard **24** is utilized through a RS232 interface **70** to drive Master Unit **10** which is diagramatically shown in this figure and includes a synthesizer portion **40** and a microprocessor **42**. As will be described, microprocessor **42** includes a CPU and associated memories. This is an important feature of the subject invention in that the synthesizer, as well as the functions performed by the TIU are connected by a handshake through the individual CPUs of each of the individual TIUs. The system of driving and processing the outgoing signals, as well as the incoming signals by utilizing a main memory and a CPU in each TIU which duplicates, to a certain extent, the main memory and CPU in the Master Unit permits the main memory and CPU of each of the TIUs to perform the numerous tasks involved in the polling system without having a centralized computer which must be accessed on a time-shared basis in order that the polling functions be performed. This also permits a general solution of providing outgoing messages and processing of incoming information through the utilization of software-driven apparatus. As will be described, hardware in each TIU provides for tone decoding, call progress

visited 2/18/2020

detection, tone generation, dial-pulse generation, ring-in detection, and a dial ringing output (DRO) detection, i.e. detection that a telephone number is being dialed.

Referring back to FIG. 2, each TIU 12 includes its own CPU 44, its own main memory 46, a voice dynamic memory 48 coupled to a synthesizer 50, its own dialer 52 which is under the control of its CPU, its own tone generator 54 such as National model TP5088, a Touch Tone decoder 56 such as Teltone model 957 and a call progress detector 58. Call progress detector 58 is commercially available as Teltone model 982 which detects a dial tone signal, a busy signal, or a ringing signal for purposes of the aforementioned branching. The TIU also includes a pulse generator 60 such as Motorola model MC14408 and an audio presence signal amplifier and comparator 62 which amplifies the incoming audio signal and squares up the incoming signal through the utilization of a comparator type clipping circuit. This is used to produce pulses for signal recognition by the equivalent of a Fast Fourier Transform analysis system, in which the frequency of the incoming signal is utilized by the CPU in the TIU to reliably determine ringing, busy, noise, and voice signals by software processing techniques, thereby to permit branching upon signal types which heretofore have been difficult to detect.

The TIU also includes a transmit audio amplifier 64 such as National model LM3900 as will be described, as well as, a ring-in signal detector as part of the telephone interface circuits such as Cermetek model 1810 utilized in the "call in" mode of operation.

It will be appreciated that in operation, the system is initialized through utilization of keyboard 24 which configures the Master Unit to accept the entering of a message into the synthesizer portion of the Master Unit by virtue of microphone 28. The keyboard control also permits message trimming through the utilization of start and end addresses, and establishes the sequence or format for the message transmission and receipt of polled information. This information is the result of the recipient dialing in a number. The keyboard provides preprogramming for the telephone numbers to be dialed either directly or through the utilization of exchanges plus random numbers, and permits defining the dates and times for the survey. The number of completions and the maximum number of calls to attempt are also programmed in at the keyboard. The personal or other computer processes the polling returns and prints out the cross-correlated results in any of a number of predetermined formats, as well as providing a menu selection function so that the user is easily prompted to configure the system for his own particular purposes.

MASTER UNIT

Referring to FIG. 2, in order to implement the menu-driven inputs, computer 18 is coupled to Master Unit 10 by an RS232 interface cable 70 which, upon appropriate command, permits the Master Unit to digitize the messages to be transmitted through the polling system and provides an immediate ability to read out and edit through the aforementioned speaker 30. The output of the Master Unit is coupled via data and address busses 72 to each of the TIUs through a back plane attachment system so that the voice-in sequence can be programmed into the TIU, as well as the branching format which is utilized in the polling process.

Referring now to FIG. 3, microphone 28 is coupled to the Master Unit through amplifier 72 which is in turn coupled to an input audio filter and sample-and-hold buffer 74. This buffer is, in turn, coupled to an analog-to-digital converter 76. A bar graph display 78 is provided which includes a bar graph driver and a LED bar graph display 82 of FIG. 7, as will be described hereinafter.

Analog-to-digital converter 76 is coupled to an analysis and speech synthesizer unit 84 which, in one commercial embodiment, is an OKI model MSM5218RS unit. Output of the synthesizer 84 is coupled to an encode/decode-buffer 86 which, in turn, is coupled to a dynamic memory 88, which dynamic memory is utilized for the digital storage involved in the generation of the speech. As can be seen, upon a dump command over line 90 from the Master Unit's CPU 92, the dynamic memory is dumped via bus 94 back through the encode/decode buffer 86 through speech synthesizer 84 and then out to the output audio filter 96 which drives speaker 30. The dynamic memory for the speech is controlled by address decoder logic 100 to decode dynamic memory addresses over bus 102 from CPU 92 and provide the appropriate address to the dynamic memory by an address bus 104.

It will be appreciated that the output of the dynamic memory for the speech is provided over a data bus 106 to a transceiver 108 between the dynamic memory and CPU 92. Transceiver 108, is connected to CPU 92 via a data bus 110. The CPU includes a microprocessor and a buffer and is coupled to a Master Unit memory generally indicated by dotted box 112 to include a PROM 114 connected to the CPU via data bus 116 and address bus 118; and to a RAM 120 connected via data bus 122 and address bus 124. The PROM or the RAM is enabled alternatively by a memory decoder 126 which is controlled by a memory enable line 128 from CPU 92 to either activate the RAM as a scratch pad memory, or the PROM which is the software drive. Note that memory decoder 126 is driven via an address bus 130 which is coupled to the CPU 92.

CPU 92, along with its microprocessor and buffer, is utilized in one instance via a data bus 132 to drive one portion of a TIU/Master buffer and timing unit 134 which includes, in essence, two sections. The first section is the Master/TIU buffer 136 and timing strobe subunit which serves to couple data generated by CPU 92 via bus 138 to Master/TIU line drivers 140, which in turn couple data and strobing to the TIUs. Unit 140 includes buffers for a non maskable interrupt signal, NMI, which, in general, is used to instruct the TIUs to look at the data, e.g. the output of the line drivers which are strobed or sampled at a given time.

The second portion of unit 134 is the TIU/Master buffers 142. It is utilized to transmit information or data from the TIU to the CPU of the Master Unit. This information is then processed and read out through the RS232 interface cable 70 to computer 18 so that the responses, properly processed by the Master Unit, can be analyzed by computer 18. The RS232 interface, as will be described hereinafter, is illustrated by reference character 144.

An LED latch 152 coupled to data bus 132, drives master LED display 154, which provides a visual representation of the mode of operation of the Master Unit in terms of an "operate" mode, "test" mode and at least two "alarm" modes to, for instance, indicate whether or not there is proper communication between computer 18 and the Master Unit or between the Master Unit and the TIUs.

visited 2/18/2020

The aforementioned address bus is also utilized to control a port decoder unit **150** which serves a number of functions critical to the operation of the Master Unit. In general, the port decoder provides a number of "enable" signals, as will be described.

The enable signals from the port decoder are controlled via signals over an I/O line **156** from CPU **92**. The enable signals from the port decoder are delivered over lines **158–168** such that the enable signal on line **158** enables the LED latch **152**; the enable signal over line **160** enables the encoder/decoder buffer to the synthesizer, i.e. encoder/decoder unit **86** to set the parameters for the synthesizer is terms of the number of bits and the frequency for proper analysis and synthesis; the enable signal on line **162** and Read or Write commands from the CPU **92** configures transceiver **108** in either a transmit or receive mode; and encoder/decoder unit **86** in either a corresponding READ or WRITE mode; a signal over line **164** configures via TIU/Master buffer and timing unit **142** to indicate to the Master Unit CPU **92** that all of the TIUs are ready for the next global communication; enable signal over line **166** which is coupled to subunit **136** reads out information or data to the TIUs; and enable signal over line **168** which is coupled to unit **140** enables the microprocessor buffers for the transmission of data to the TIUs. It should be pointed out that the TIU READY line from the TIUs enters subunit **142** and is enabled via a signal over line **164** to transmit the TIU READY indication to the CPU via the data bus **132**.

Note that there is a WRITE line **172** which is coupled from CPU **92** to subunit **136** and a READ line **174** which is coupled from CPU **92** to subunit **142** for the control thereof.

It will be appreciated that throughout the subject system numerous data busses are shown for ease of description. Also shown are a number of address busses likewise to facilitate the description of the invention. In practice, however, only one data bus is utilized and only one address bus is utilized for the proper control of the relevant units.

TELEPHONE INTERFACE UNIT

Referring now to FIG. 4A, the CPU memories and synthesizer of each TIU emulate or are made to emulate the corresponding units in the Master Unit. More specifically, the microprocessor section, the PROM and RAM, the TIU/Master buffer, the Master/TIU buffer, the memory decoder, the port decoders and drivers, the transceivers, the address decoder and main memory dynamic RAM emulate those of the Master Unit, with the exception that the main memory dynamic RAMs for each TIU have four times the capacity of those of the Master Unit because they must store the entire outgoing voice messages, whereas the Master Unit only stores one at a time. Thus, the data bus from the Master Unit here illustrated in FIG. 4A by reference character **200**, is coupled to a Master/TIU buffer and timing subunit **202** of a composite unit **204** which includes the TIU/-Master buffer and timing unit **206**. It is the purpose of this unit, amongst other things, to provide data over a bus **208** to the CPU **210** of the TIU. Likewise, data from CPU **210** is delivered over a bus **212** to TIU/Master and buffer timing unit **206** to be transmitted via bus **214** to Master Unit **10** and then via the RS232 interface **70** to computer **18**, so that the information derived during polling may be processed. The CPU in each TIU includes a memory, in general illustrated by dotted box **216**, to include a PROM **218** and a RAM **220**, respectively having data busses illustrated at **222** and **224** and address busses illustrated at **226** and **228**; with the PROM and RAM being under the control a memory decoder **230** which is driven by a memory enable line **232** and is addressed via an address bus **234**.

Each TIU includes an identification number generator **240** which is preset by switches SW1 and SW2 to provide a unique code over data line **242** to CPU **210** within the TIU. This uniquely identifies the active TIU for purposes both of dialing out and transmission of information to the recipient as well as receipt of the polled information from the recipient.

CPU **210** also drives an encoder/decoder buffer **250**, which, in turn, drives a dynamic memory **252** which is under control of an address decoder logic **254** that receives addresses over address bus **256** from CPU **210**. The purpose of this portion of the dynamic memory is to drive the speech synthesizer through the encoder/decoder memory **252** and the audio signal decoder and latch circuit **260** which serves as the speech synthesizer for the individual TIU. The output of synthesizer **260** is coupled to a low pass filter and amplifier **262** which is coupled to an analog card **270** to be described hereinafter.

It will be appreciated that the CPU, voice synthesizer, and memory is carried on a separate card **272**, although the functions as described here interrelate as will be seen. As described before, a port decoder and driver **264** is driven via an address bus **266** from CPU **210** to provide a number of enable signals over lines **274–286**. The enable signal on line **274** is coupled to synthesizer **260** to set the parameters for the synthesizer in terms of the number of bits and the frequency for proper synthesis. The signal over line **276** clocks the data into the latch portion of the synthesizer and then to the synthesizer circuitry. The enable signal transmitted over line **278** is the aforementioned TIU READY signal which is transmitted back to the Master Unit. The signal transmitted over line **280** is coupled to encoder/decoder **250** to enable the dynamic memory encoder/decoder buffer. The enable signal transmitted over line **282** enables the TIU/Master buffer to enable this unit to send data back to the Master Unit. The enable signal transmitted over line **284** is transmitted to the analog card of FIG. 4B to a microprocessor interface which includes a data interface **292** and a signal interface **294**.

Referring back to FIG. 4A, the enable signal over line **284** is coupled to data interface **292** to read data from a Touch Tone or DTMF decoder **296** and to permit the writing of data into a dial-pulse generator **298** and a tone generator **300** as required. Thus an enabling signal over line **284** either reads the results of the DTMF decoder **296** back to the TIU memory or writes data both into the dial-pulse generator **298** or the Touch Tone generator **300** depending on which mode of operation is selected by a switch S2 coupled to the dial pulse generator and then to the telephone line interface and buffer amplifier **302** which determines whether Touch Tones are transmitted over the telephone network or pulses. Switch S1 sets the number of pulses/sec i.e., **10** or **20**. In order for the Touch Tone generator to provide the appropriate tones they are amplified and buffered by a transmit audio amplifier and buffer **304**, which is also coupled to the output of the low pass filter and amplifier **262** to transmit the synthesized voice over the telephone line.

visited 2/18/2020

The enable signal over line **286** is coupled to signal interface **294** either to write data to an LED display driver **306** or to read data from a call progress detector **308** or the audio present line detector **310** whose functions will now be described.

With respect to call progress detector **308**, signals from the telephone line interface buffer and amplifier **302** are applied thereto, with this hardware circuit determining whether the signals over the connected telephone line reflect a dial tone, a busy signal, or a ringing signal.

With respect to the audio present amplifier and comparator **310**, this unit is connected to the telephone line interface buffer and amplifier and thence to the signal interface **294** and CPU of the TIU which indicates via a signal over the appropriate line that an audio signal is present which may represent either noise, a voice, or any incoming audio signal which may be used for any of a variety of purposes. The processing by the CPU constitutes the software analysis of the incoming signal to identify the type of signal coming in. In one embodiment, preference is given to the software analysis versus the hardware analysis of the call progress detector. Here detector **308** is used to check the software analysis. Alternatively, the roles can be reversed.

With respect to the LED display driver **306**, this driver is utilized to indicate an "off hook" condition, a dial tone receipt, the presence of ringing, the on going polling operation, or an alarm condition such as the non-receipt of a dial tone.

Referring to FIG. **4B**, it will be appreciated, as seen from the diagram, that there is a two-way data bus going from the CPU **210** of the TIU to the microprocessor interface **290** in that there is two- way communication over the data bus with respect to the data interface subunit **292**, whereas a signal interface subunit **294** also is coupled to this two-way bus. The purpose of the signal interface unit is to hand off to the TIU's CPU the hardware-derived presence of a dial tone, a busy signal, a ringing signal, an audio presence signal, and a ring-in signal developed in the telephone line interface **302** is stored in the ring-in flip-flop **314**, the purpose of which is to establish that an incoming call has been received. The ring-in flip-flop is, as illustrated, coupled to the telephone line interface buffer and amplifier for this purpose. Note, for the "call in" mode, the reset signal from data interface unit **292** is coupled to the ring-in flip-flop **314** to reset the ring-in flip-flop to receive the next call after the present call is finished.

Also provided is a dial ringing output (DRO) signal from DRO unit **316** which is coupled to signal interface subunit **294**, with a signal therefrom indicating that a dialing operation is occurring. It will also be appreciated that the TIU includes an analog timing section **320** which has output signals to control the dial pulse generator **298**, the Touch Tone generator **300** and to enable DRO unit **316**; with signals from the analog board timing section permitting the dialing of numbers derived from the data interface subunit **292** over data bus **322**.

Also shown is an enable line from data interface subunit **292** to the signal interface subunit **294**, which is an Intel model **8212** interrupt that indicates to the CPU that there is data in the **8212** storage register, with the presence of an enable signal on this line indicating that the DTMF decoder has determined that incoming DTMF data is present and has been latched in the **8212** register, which data is ready to be read out to the TIU's CPU, in this case CPU **210**.

As an optional feature, an enable signal from the data interface subunit **292** over line **324** may be utilized as a squelch control for the telephone line interface buffer amplifier **302**.

It will also be appreciated that the data interface subunit **292** produces a reset signal over line **326** to the DTMF decoder **296** after a call is finished, whereas DTMF decoder **296** produces a signal over line **328** back to the data interface unit **292** indicating that the incoming line is a DTMF line, not a pulse line. If the incoming line to which the TIU is connected via the telephone interface unit **302** is a line which is connected to a pulse dialing telephone, it would therefore be important to note this so that specialized processing may be instituted in order to obtain information relative to polling. Alternatively, information from pulse dialing telephones may be ignored.

OVERALL OPERATION

An understanding of how the subject system operates will be evident from the following example of how the user sets up, runs, and displays the results of a scientific public opinion poll or survey. Note, menus provide the user with a series of prompts to guide him through the entire set-up, run, and display results sequence.

First, the user turns on his personal computer and enters the correct date and time on his monitor via his keyboard. The personal computer then automatically loads the operating program. Following notice of the copyright and clear RS232 page, the user obtains the Master Menu on his monitor by pressing ANY KEY on his keyboard.

Pressing S provides the user with the Set Up Survey Menu. Information for each of the first four items, i.e.. V, F, P, and T must be recorded or entered into the system prior to running the survey. Accordingly, the user presses V, which results in a Record Voice Messages Menu appearing on his monitor. He then is prompted through a series of steps to record his message at the proper audio level, controlled by adjusting the Audio Level meter on the Master Unit panel and with the proper message length, "X". When this has been done, the user presses S, which sends the recorded message to the TIUs. A Data Transfer Light Emitting Diode (LED) in each TIU turns on during the recorded message transfer and turns off when the transfer is completed. A similar procedure is required for each different message to be recorded. After all such messages have been transferred to the TIUs, the user presses X to exit the Record Voice Messages segment and return to the Set Up Survey Menu.

Next the user presses F to record the flow control, i.e., to determine which message is to be sent over the telephone lines and when it is to be sent. Pressing F provides the user with a Record Flow Control Menu on his monitor. In the Current Flow Chart example, "A" signifies the first message, "B" the second, "C" the third, etc.; the numbers 1, 2, 3, etc., representing responses from the person being surveyed. The dash "-" indicates the start of a voice message whose symbol follows. Thus A1B2C3D-BE-CE-DE-E indicates that message "A" followed by response "1" triggers message "B", which with response "2" triggers message "C", with which response "3" triggers message "D", etc.. Pressing I allows the user to input new flow chart data and then pressing S sends the data to the Master Unit microprocessor for storage. When this has been

visited 2/18/2020

done the user presses X to return to the Set Up Survey Menu.

The next item that must be recorded is the telephone information and the user accordingly presses P. This results in the appropriate Telephone Menu. From this menu the user has three choices of telephone numbers to call; that is, numbers arising from a random number generator, a user generated list, or a purchased list. The user selects which of the three he wishes by pressing R, U, or P and enters the required input data as directed on his monitor prompts. When such input data has been entered, the user presses X and returns the user to the Set Up Survey Menu.

The final item that must be recorded before a survey run can be made is the survey schedule itself. The subject system allows the user up to three sets of start and stop times for each day of the survey. By pressing T on the Set Up Survey Menu the user obtains the Record Survey Schedule Menu. After the proper entries have been made the user presses X to return to the Set Up Survey Menu. A second pressing of X returns the user to the Master Menu. At this point all the needed input information has been entered and the user is ready to run the survey.

By pressing R on the Master Menu, the user obtains an Initializer Menu which allows "C" clearing all old data before statring a new survey. "V" is the same as "C" but saves voice messages to hard disc first or "R" to re-start an existing survey as if never stopping, or X for Master Menu then obtains [if not "X"] a Run Survey Menu. Then items D, V, T, B, and C on this menu are intended for testing and checking the system prior to the actual running of the survey, which is done automatically on the scheduled time and data, if the system is not in the Dial Test mode or can be accomplished by pressing S. Pressing P provides the user with a real time printout of the survey results to present as they are obtained while the survey is in progress. When the survey has been completed, if the user chooses to terminate the survey at any time he may do so by pressing E. By pressing X he returns to the Master Menu.

After the survey has been completed, the results obtained can be analyzed by the Display Results programs. These programs analyze the active survey results to provide the desired information. Access to the display results is obtained by pressing D on the Master Menu which provides the Display Results Menu. If the survey was conducted by using random number generated telephone calls, the user presses M, which allows him to select and analyze only the responses from particular exchanges out of a possible 300 exchanges. If the survey was run with either user or purchased list telephone numbers, he skips option "M". In either case the user presses S, which allows him to define what the program is to analyze or search for in the survey results and then tallies and displays them in a printed report.

Finally, current active files on voice messages, survey data or report information can be saved by pressing F on the Master Menu, which provides the File Survey Information Menu.

DETAILED OPERATION

In more detail, and referring back now to FIGS. **3** and **4**, it will be appreciated that the Master Unit is initialized from the personal computer via the RS232 interface as follows:

To record the voice, computer **18** sends the command via RS232 to the Master CPU telling it to activate the recording section, and whatever is spoken goes through microphone **28**, amplifier **72**, then buffer **74**, then A/D converter **76**, then synthesizer **84**, then encode/decode buffer **86**, and then is transmitted to memory **88**. At this point buffer **86** is acting as a encoder since it takes the data coming in and encodes it into the data which can be stored in the dynamic RAM for speech storage. Samples of the speech are clocked into the dynamic RAM until the appropriate key on the keyboard is depressed, which sends a signal to the RS232 interface to instruct the CPU to stop the incoming audio signal. At this point, the Master CPU does not grab the data, but rather ignores it regardless of the fact that the LED bar graph on the Master Unit will still go up and down whenever somebody speaks. Therefore one can adjust the microphone and voice volume without actually putting it in the memory. More specifically, when the appropriate key on the keyboard is depressed, the program in computer **18** converts that key into a particular token which the CPU recognizes as being the token to record voice. Therefore, the CPU starts storing voice data sequentially in memory. The CPU will continue doing this until the user stops recording or the Master Unit runs out of memory. If the Master Unit runs out of memory, all future data coming in is ignored and an error code is generated and displayed. In one embodiment computer **18** displays exactly how much data is in memory, so that for each phrase of a message one knows how much memory and time have been used up and how many seconds one has left.

Once the information is stored in the memory, scratch pad memory **120** produces pointers to memory **88** which tells where messages start and stop. For instance, if one were to record a message and this is a message that might start at zero and end at 7,000 hex, when this message is complete, the operator instructs the Master Unit to play the memory. This sends another token down to the CPU of the Master Unit, which then goes to the beginning of the memory as indicated by the dynamic RAM. This starts memory **88** sequentially from the beginning at 000 all the way to the end address. The Master memory's CPU provides instructions to take the data from DRAM **88** and encode it back into a synthesized voice which then goes out through an internal monitor speaker **30**. When voice is played, the raw data is taken from the memory **88**, synthesizes it, and couples it out to speaker **30** so that an operator can listen to it and see if that is what he wants. After the operator listens to the message, he might decide that he might want to cut off some of the front end audio. It might have too much dead space or it might have a phrase altogether that he does not want. So by keyboard control of the computer, the operator instructs the deletion of a fraction of a second from memory. That sends a token over the RS232 interface to the CPU which then grabs the beginning pointer of the memory as pointed to in the scratch pad memory **120** and increments it by the amount of bites required to actually represent a half second of speech. What is now saved is a new starting address which results in the deletion of the first half second from the message.

Every time the operator hits a key to "delete", more speech will be deleted from the beginning of the message. So every time one sends a "delete" it will move that pointer up by a half second's worth of memory. Now the operator can depress the "play" button, and the whole process of playing will begin again. Now instead of starting at 000, it might start at 200 hex or

visited 2/18/2020

2,000 hex depending on how far up the pointer is moved. Note that all deleted speech is still in the memory. It simply is just not played from its initial starting point.

Now, if the operator decides he went too far forward after he has played the message and he wants to go back a little, the operator can undo some of the deleting so that he can back up the same way at half second increments until he hears the beginning of what he wants. So theoretically one plays the message to see if that is what one wanted. If it is not, one stops the play and decrements again until one hears the message the way one wants. This same editing process can be used for the end of a message, as well as its beginning. Thus, the purpose of the RAM with respect to the CPU as a scratch pad memory is to, at least, control the editing process.

The scratch pad memory or RAM also keeps track of the active TIUs that are connected to the Master Unit. This is done at the power-on sequence. The Master Unit goes through and polls every possible TIU number and TIUs that answered, with stored data being active in the scratch pad RAM. The RAM also contains a lot of miscellaneous variables that the Master Unit needs to perform functions that are unique for their particular purpose and are ignored after that.

Thus, the main function of the RAM is to keep track of memory **88** for how big the message is and to keep track of the flow chart that comes from the RS232 interface. It also keeps track of telephone numbers in the same way. It is acting as a go-between, between the RS232 interface and the TIUs for almost everything. The scratch pad memory **120** is a temporary storage memory before the Master Unit can send data to each of the individual TIUs. Likewise, when the TIU sends an answer to the Master Unit, RAM **120** saves the data until computer **18** is ready to receive and then it transmits this data over the RS232 interface to computer **18**.

The PROM carries the code of the program for the CPU. The scratch pad RAM is strictly a variable and the PROM is the actual controller, always in control of the CPU as far as telling it what to do and what sequence to follow. The PROM and the RAM can be thought of as one entire block of memory. The fact that the PROM is not changeable and the RAM is, is not relevant for purposes of the present discussion because the CPU can only address one place at a time. So when the CPU goes to the PROM it addresses only the PROM and if it needs to get a variable, it will go only to the RAM. It will never address more than one address at one time. So, therefore, the PROM is always addressed by itself, as is the RAM.

It is important to note that the Master Unit produces only one voice message at a time and that once a message is completed, it is transferred to all of the TIUs simultaneously.

There are several lines used for communication between the Master Unit and the TIU. These are the NMI, the INT, the TIU READY, the data lines and the data strobe. The NMI indicates a nonmaskable interrupt to the TIU's. As far as the CPU is concerned, this is a line which the Master Unit's CPU **92** pulses to indicate to all TIUs that the CPU is about to send an address. All TIUs see this signal and all look at it and depending on their state, they will then wait for the data to come from the Master Unit. If they are already polling somebody, they will ignore the NMI. So the NMI indicates that an address follows.

The next line, the interrupt (INT) line, indicates to a TIU that a data byte has arrived. What that data byte indicates is based on a particular sequence of protocol, but the interrupt line does tell the TIU that data has arrived and also creates an interrupt on a TIU processor.

The TIU READY line is a line that all TIUs are hooked up to sequentially, and if any one of the polled TIU READY lines is high, then it stays high. What this does is allow the Master Unit to know when all the TIUs are completed with particular data communication. For instance, if a TIU is taking a long time to process a particular byte, the corresponding TIU READY line will stay high until the TIU is ready, and the Master Unit will wait for that line to go low, for a certain amount of time. Thus, the Master Unit will not send a byte before a TIU is ready for it. The two data busses themselves are all the standard 8 bit data lines The strobes for the data busses indicate to the Master Unit that data has arrived from the TIU and visa versa.

FORMATTING

The person operating the Computer **18** will send a token to the CPU of the Master Unit instructing that data be sent to the TIUs. The CPU of the Master Unit **92** will then address all the TIUs. In other words, it will tell all TIUs present to be prepared to receive voice data. It will then send the name of that particular message, for instance, the letter "A", followed by an end of text code, followed by all the voice data corresponding to message "A"; and when it is done sending out the message, it stops the transmission by sending out an end of transmission code. The TIUs will then realize that that is a complete message, and they themselves will store it with a start and end address so they know where to play that particular message. The result of the foregoing is that one message has been labeled, such as by the letter "A", and has been stored in this particular configuration in the dynamic memory of each of the TIUs. It is then up to the operator to program the flow of the messages; in other words how the messages are to be spoken, which one comes before the next, and also whether the TIU is to wait for an answer, and what type of answer to wait for, as well as what action is to be taken based on the answer received. This is done by what is called a flow chart, which consists of a series of letters and symbols indicating how the polling is to proceed.

FLOW CHART SYMBOLS AND FUNCTIONS

Each letter indicates what message the TIU should send out. For instance, if there is an "A" in the flow chart, that is telling the TIU to say message "A" whatever it may be. Following the letter an "action" group tells the TIU what to do after the message corresponding to the letter is communicated. Unique to the coding system is that a character is used to designate to look for a given return number, a given number of return numbers, or a number that must exist within a given set of numbers, i.e., a "$"; an ""; or "@". Another character is a ":", this is used to branch either to a Touch Tone message cycle or to a rotary dial message code depending on the type of telephone that was detected previously. For instance, if the letter is followed by another letter, that means go speak the second message. If the letter is followed by a dollar sign and a number, that indicates that the TIU should wait and allow as a valid response, any digit from 1 up to that number. For in-

visited 2/18/2020

stance A$3 means say message "A" and then wait and allow as a valid response, the number 1, 2, or 3 from the recipient.

There are three other types of flow chart symbols and, there are 8 different ways a flow chart can be written. One way is two letters in combination, for instance AB, that says say message "A" and then go and say message "B". Another way would be with a dollar sign for instance, A$3B. This means say message "A", wait for a number up to 3 and then go to message "B". A$5B for instance, means one responds with digits 1, 2, 3, 4, or 5 and then go to message 8.

Another type of flow chart character is the "at" sign, "@", and it works the same way as the dollar sign, except in this case it is the number of digits to accept. For instance, A@3B means accept a number up to three digits in length and then go to message "B".

Another type of flow chart character is the an apostrophe "'". A'3B means wait for a number having exactly 3 digits. This forces the recipient to type in the number of charaters expected. For instance, if one asks for the recipient's social security number, this will come back with an error if the recipient does not type in the exact amount of digits required.

Another type of flow character is a full colon, ":". For instance, a full colon allows the person controlling the flow chart to base a decision on what type of telephone the person called has. By way of example, if one reaches a Touch Tone telephone one may want to ask the recipient one question. If a rotary telephone is reached, one may want to ask the recipient a different question. One does this by using a full colon. For instance, A:CB means if a rotary telephone is detected go to message "C", and if it is a Touch Tone, go to message "B". This is the type of code needed when one is trying to get an age limit or some large number of digits coming in. If the system reaches a rotary telephone, one can't go above a "3" due to constraints discussed hereinafter. In this case, one has to ask the questions differently.

The standard way of operating is, for instance, A1B2C3D. What this means is that one transmits a message "A" and then waits for a number. If the recipient responds with a "1", message "B" would be transmitted. If the recipient responds with a "2", the system transmits message "C" because the letter following the number "2" is a "C". Thus one can branch based on an individual number. Moreover, one can branch to the same letter by several different paths.

A semi-colon indicates that this is an end message and is used for two reasons. One is where one says a message where one does not want to ask any more questions. Termination is accomplished with a semi-colon. Another reason is that if there is an error at any time from the recipient and one wants to terminate the call, the semi-colon is used. In the subject system flow chart, the system will automatically go to a message corresponding to the letter previous to a semi-colon and hang up the telephone. For instance, if one has an "A;" this means transmit message "A" and hang up. If the flow chart is, for instance A1B2Z-Z;. then this means if the recipient responds with a "2" to message "A" go to message "Z". Message "Z" says say message "Z" and hang up because there is a semi-colon after the Z. Likewise, if one provides a flow chart that says A$3B and the person does not answer with a number "1", "2" or "3"; for instance, they respond with a "4" twice in a row, then the TIU will look to the first letter previous to the first semi-colon, in our example Z, and say that message and hang up. This is useful for having a closing message such as "Thank you very much. Goodbye." So if somebody doesn't understand what to do twice in a row, the system can still politely hang up without just clicking off. The twice-in-a-row feature is preprogrammed into the flow chart automatically, with a wrong answer resulting in a message retry.

The last character of the subject flow chart system is a period, and this indicates to the TIU that there is no further flow chart information.

With repsect to the use of a dash "-", and considering A1B2C3E-BD-CF-D;-EB-FD, the dash separates action groups. Also when the TIU is looking for message B, since the person answers "A" with "1", "-B" is found instead of EB. So the letter immediately following a dash is the one that is branched to and spoken.

EXAMPLE

The flow chart, in simplified form, may be AB-B1C2D3E-E;-CD-D;. This can be interpreted as follows: Each section of this chart is an individual entity on its own. The AB in this case is the start point, and each subsequent section is started with a dash. Note, the first letter of a flow chart has an "Implied" dash, i.e., -AB. Thereafter there is a complete section unto its own. In every case the letter which is indicated first such as the "A" is the message in question which is spoken. For -B1C2D3E message "B" would be the message that was spoken. Any letter or numbers that follow the first letter tells the computer what to do next. Now following through one at a time, for the above format message "A" is spoken and then the computer hunts for the next character, which is a letter, message "B". To find it the computer starts at the first position and moves until the computer finds a "-B", at which point it stops and says message "B". The next thing following message "B" is a number, so the computer immediately knows that a response is expected and the person must dial a "1", "2", or "3". If a "1" is received, it is compared to a "1" in the RAM, and if they compare, the computer then moves to the next message, and it should go to message "C". The computer then starts at the start point and works its way through the flow chart looking for a "-C" and when found it says message "C". Since the next character is a "D", it will then look for a "-D" starting at the front of the flow chart and works its way through to a "-D". It will then say the "D" message. The next character is a semi-colon. This indicates that the survey of this person is complete. The telephone is then hung up. Going back again, if message "B" had been annunciated and the party on the other end of the line dialed a "2", the comparator would look at the "1" and find that it would not equal what was dialed back. So the computer would skip over the "C" message and look at the next character which is a "2". Having compared it to "2" the computer would move on to the next character which is a "D" and then hunt for a "-D" message starting at the front of the flow chart and work its way down until it found the "-D". Then the "D" message is said. The semi-colon then indicates that the system is to hang up. If the recipient erroneously dialed a "4" which is not contained in the flow chart at all, the "B" message would have been said. The program now goes back with a "4" comparing it with a "1". It does not compare, so two places are skipped to the next character which in this case the number "2". This does not match the "4", so two places are skipped

visited 2/18/2020

again to the "3". This does not match the "4" either. The computer then looks two spaces over for the next number, but there is no next number. There is a dash. When the computer finds the dash it says the party did not dial one of the digits defined by the flow chart and checks to see if message "B" has been said twice. If not, then message "B" is repeated. If the same thing happens and a "4" or any other invalid response is dialed, the computer determines that an error was made two times in a row. The program then goes to the first letter which has a semicolon following it. So starting at the front of the sequence, the computer would roll down until it finds a semicolon, back up one space where it finds "E", and it says message "E". It simply would say "Thank you very much. Goodbye."

PHONE NUMBER GENERATION

In one embodiment, telephone number selection is one of two types. One is a random number generator, and the other is a user list from which numbers are supplied. In one embodiment, for random number generation on computer **18**, the operator supplies up to 300 different exchanges and pre-exchange information, for instance area codes, and then decides how many numbers are to be generated for each exchange during a particular survey. A random number is then the four last digits of a telephone number. For instance, on exchange 295, the computer would create a random number from 0000 to 9999 and append the randomly-generated number to exchange 295. It will be appreciated that the random numbers are created at computer **18** through the utilization of any one of many common random number generating routines. Once the random number is generated computer **18** will then send it to CPU **92**. CPU **92** will then place the telephone number in RAM **120**.

Once the Master Unit has a number for a TIU, it compares the pre and exchange information (i.e the NON-random part of the number) to see if it is the same as was received interface from the RS232. If the pre and exchange numbers have been changed, the Master Unit will send them to the TIU first. In either case, the Master Unit will then send the four remaining digits (the random part) to the TIU. Once the TIU has that telephone number it will automatically go through the dialing and and polling process as indicated with the flow chart and the voice that it already has.

What happens is that the Master Unit on the first pass will send the entire telephone number to a TIU and keep track of the exchange and the telephone number which are separate. The next telephone number which the Master Unit is asked to send will be checked against the last one that was sent, and if the exchange is the same, it knows that the TIU has the same exchange. Therefore it will only send the four digits. The TIU does not send anything back to the Master Unit which simply remembers what it initially sent to the particular TIU. Any time the exchange is changed, then the Master Unit will resend and keep track of the new exchange. At this point the TIU has the voice and the flow chart required for a survey and it has at least one telephone number in it. The Master Unit then polls all TIUs until one of them comes back with a status indicating that they have an answer from a recipient. The Master Unit will then indentify that particular TIU and read the response from the recipient. For instance, if the recipient answered "2" to message "A", the Master Unit will get a message that has "A2" in it to indicate that is how the user answered the question. The Master Unit will store this result in its scratch pad memory **120**, and then it will wait for the RS232 interface to poll it and give the RS232 interface an indication that it has an answer and likewise will send the answer from RAM **120** out the RS232 interface to computer **18**, which will then append the telephone it sent to the TIU and store the results on disc. The Master Unit will then indicate to computer **18** that it needs a new telephone number for that same TIU. Computer **18** then generates a random number or a user list number, and sends it down to CPU **92**, keeping track of which number went to each TIU. CPU **92** saves it in RAM **120** and automatically turns around and transmits that telephone number back to the TIU that gave it the answer. The TIU then takes that number and takes the next survey. Meanwhile, the Master Unit begins polling for the next available TIU. This sequence is repeated. It will be apparent from this description that the TIUs do not operate completely independently. They do, however, operate independently with respect to the polling; but with respect to the transmission of the polled information back to computer **18** for analysis and also for obtaining the telephone numbers, the Master Unit must be connected to the TIUs. Thus, the TIUs are able to go through the polling sequence once the telephone number has been dialed and they are independent of each other in the sense that they can dial up on different telephone lines, take a poll and record the results.

OPERATION OF THE TIU

Referring now to FIGS. **4A** and **4B**, and the operation of a TIU, one of the biggest differences between the TIU and the Master Unit is that the TIU has enough memory for four times the amount of memory that the Master Unit has. Memory **252** thus allows one to have several messages in the memory at one time, approximately 6 minutes of messages in one embodiment. The CPU of the TIU acts a lot like the CPU of the Master Unit in that it accepts commands from the Master Unit just as the Master Unit's CPU accepts commands from the RS232 interface. The CPU has a PROM to control it just as the Master Unit does, and it also a has scratch pad RAM like that of the Master Unit, which is used to save the flow chart and the particular telephone number. It is also used to save the results from the recipient that it will send back to the Master Unit. Once the four digits of the telephone number are received, the TIU dials the telephone number based on the telephone number in its memory.

The TIU contains the capacity to store 6 minutes of speech, which can be made up of several messages that can be randomly accessed and thus spoken in any required order.

It also contains a scratch pad memory where the telephone number to be dialed is entered, as is the flow chart of messages, a map of the storage position of the various messages and an area for answers and other return data to be sent back to the Master Unit upon request. The PROM contains the control code to operate the TIU.

The messages are sent to all the TIUs in parallel. The remaining required data, the flow chart sequence and the telephone number must be sent individually to each TIU and the exactness verified before acceptance for use.

The messages and message flow chart must first be transferred from the Master Unit to the TIUs. During

visited 2/18/2020

operation, the Master Unit polls the TIU looking for an inactive TIU, and when found, the TIU status and last message data is sent to the Master Unit for later analysis by computer **18**. The Master Unit then transfers a telephone number from computer **18** to the TIU. Upon receipt of the last four digits of the telephone number, the TIU is activated to start the call, and the telephone number is dialed, either rotary or DTMF, as per the setting of an internal TIU switch. The TIU then analyzes the signals coming from the telephone line via interface buffer and amplifier **302** to find out whether it is a busy, a ring, noise, a SIT tone, or too much audio, indicating an answering machine. Upon recognition that a person has answered, the TIU will then voice the first message per the flow chart and if no answer is required, will then voice the next message. If an answer is required, the TIU will then wait for an answer. Once the recipient answers, the TIU will analyze that answer and see if it is a valid answer. If it is not a valid answer, it will repeat the question one more time, and if it does not get a valid answer again it will voice the first message in the flow chart with a semicolon following it, this being a termination message. A valid answer, is for instance, with a flow chart of A$3B, any number 1, 2, or 3, after the message "A" has been spoken. A "4", for instance, would not be a valid answer. An invalid answer is also "no" answer. If the recipient did not understand the question and did not respond right away, after a certain amount of time the question is repeated. This sequence of one repeat if required is for every question asked.

With respect to the analysis of the types of signals that are incoming, there is a DTMF decoder, an audio present amplifier and comparator, a call progress detector including a dial tone, busy, and ring output, a ring in detector, and some software detection utilizing the signals from the audio present detector and comparator to detect various conditions which can exist for the incoming signal to the telephone line interface buffer and amplifier **302**.

In operation, the hardware portion of the input signal recognition detects dial tones, busy signals, rings, Touch Tones, and ring-in. The software detects rings, busy signals, SIT tones, voice, noise, and rotary dialing. In one embodiment the hardware outputs, are dominant or chosen over software outputs with software outputs being used if there are no available hardware outputs. Actually, the only duplication is for rings and busy signals, with the hardware outputs taking precedence.

A typical sequence for operation of the polling unit would be as follows: An unused TIU is identified as being capable of receiving a telephone number generated by computer **18**. Thereafter, the particular telephone number to be dialed is computed by computer **18** and is interfaced through the Master Unit to the particular addressed TIU. The TIU upon command from computer **18** through data interface subsystem **292** causes either dial pulse generation or tone generation of the telephone number, which is placed on a particular telephone line. Thereafter, the audio present amplifier and comparator, the call progress detector and the DTMF decoder are each ready to analyze the incoming signals. Based on the receipt of voice coming back through on the telephone line which is validated, the flow chart is implemented.

SOFTWARE SIGNAL ANALYSIS

With respect to the software analysis of the incoming signal, this is accomplished within the TIU. After the telephone is dialed, the TIU will then start monitoring the audio present line **310**. It will wait for any signal coming in from the telephone line which will be amplified by unit **302** that feeds the audio present line **310**. The audio present line is a digital 1 or 0 based on the audio signal. This particular line is sampled repeatedly by the TIU and a rough approximation of the audio is then brought into the TIU. For instance, if it samples and sees the audio present line is high for X amount of time and low for X amount of time, this represents a frequency which the TIU then keeps track of in a series of frequency slots in its scratch pad RAM at **220**. After there is a certain amount of silence, the TIU will then go back and look at the scratch pad RAM and analyze what frequencies have been detected and how much of those particular freqencies it saw. More particularly, the audio present circuit clips the audio into square waves, providing a series of pulses corresponding to this audio signal. The time between adjacent pulses determines the frequency of the incoming signal, from which the type of incoming signal can be deduced. In one embodiment, the frequency is not directly measured. Rather, the existence of numbers of pulses of various frequencies over various predetermined periods of time determines the type of incoming signal.

Thus, with respect to the software signal recognition, the audio present circuit produces a series of pulses by which the system recognizes ring, busy, noise, and voice signals. Should this analysis, done via software, fail to sense anything within 21 seconds, the call may be terminated. The program for determining the type of signal is in PROM **218**, which analyzes the data in the RAM via the CPU. Note, a local ring signal is a combination of specific frequencies. However, for certain long distance calls the ring signals come in at all types of frequencies including broken up noise which sounds like brrrrrr. The subject software can detect all of the different types of rings, while the Teltone model 982 call progress detector can only detect a local ring from modern telephone equipment using a 440 Hz and 480 Hz multiple frequency ring signal.

RING, BUSY, NOISE, VOICE DETECTION

With respect to the detection of a ring signal by software this is detected by spectral distribution and by the presence of incoming pulses existing, for instance, for 2 seconds followed by a 4 second period of quiet, or 1 second of pulses followed by 5 seconds of quiet. It will be appreciated that noise usually comes in as short bursts and is ignored. Thus if a series of pulses comes in and is detected for a time interval less than 120 milliseconds, it is considered to be noise and is ignored.

With respect to a busy signal, pulses from the audio present amplifier and comparator have a prescribed spectral distribution and will be present for a half second and quiet for a half second, with a repetition of this sequence. Or a reorder signal will exist in which a quarter second of signal will exist, followed by a quarter second of quiet in a repeating cycle. Either one of the aforementioned conditions is determined to be a busy signal.

Voice signals are detected as follows. Any signal which is existing between rings longer than noise but

visited 2/18/2020

shorter than the inter-ring interval and with a particular spectral distribution is determined to be voice.

For more sophisticated determinations, a voice, a ring, or a busy condition can be verified by virtue of frequency determinations for the signals on the line, with certain frequencies being more characteristic of rings versus busy or voice signals. For instance, at selected time periods data is stored with respect to the frequencies of the incoming signal, with the data being analyzed at preselected times to verify or further indicate the type of signal which is on the line. Thus, for instance, should leading edges be counted, a certain number of counts should exist over a predetermined time period if the incoming signal is a ring signal. If this number varies significantly from that which is expected, then further analysis is necessary. In one embodiment, for instance, 16 frequency channels are developed, each recording the existence of a signal of a given frequency or frequencies. The highest channel assumes frequencies at or above a certain frequency, whereas the lowest channel assumes frequencies at or below another certain frequency. Depending on how many counts are in which channels, it is possible to determine what the type of signal is on the telephone line.

With respect to the operations that follow, detection of the type of signal on the line, and more particularly with respect to a ring, the number of rings are counted and should there be more than a predetermined number of rings without an Off-Hook indication, the Subject System hangs up and terminates the call. Should a busy signal be detected by a predetermined number of busys, the call is likewise terminated. The status of whether they are rings or busy signals or whether everything proceeded normally is temporarily stored at the TIU. The TIU then remains inactive until it is polled by the Master Unit, at which time it transfers the information through the Master Unit to computer **18**.

Upon detection of a voice signal such as "Hello", the system waits a half second and then the polling sequence is started according to the flow chart which has been stored in the TIU memory. While it might be thought that it is possible to start the polling sequence with the Off-Hook detection, this has proved to be unreliable in many circumstances, as it is possible to start the polling sequence before the recipient gets the handset to his ear.

It will be appreciated that the CPU in the TIU can either cause synthesized voice to be transmitted or can analyze incoming data but not both at once. If during the interval between two rings, there has been a miscalculation as to the type of signal on the telephone line, and the synthesizer voice has been placed on the line, then the periodic checking of the call progress detector will indicate that another ring has occurred and the TIU can be reset to terminate the message erroneously started.

PULSE DIALING DETECTION

The system can read in results sent by either Touch Tone or rotary dialed telephones. It is thus important for the system to be able to detect pulse dialing and a pulse dialing detection system is accomplished in software, with the number of pulses existing within a predetermined time period followed by a predetermined silence period indicating that a pulse dialing system is being used by the recipient. There are two different problems in detecting pulse dialing. On local lines when one dials a digit "1", one obtains a characteristic make/-break pulsing on the line. The "2" is the same thing repeated twice. A "3", of course, is a make/break repeated 3 times. Beyond that, the signals coming back over the telephone lines are not reliable, especially long distance. While locally it is possible to detect any digit, with long distance one cannot rely on anything over 3.

While this particular make/break footprint of a number of pulses within a predetermined time period is useful for the detection of pulse dialing, there are so many unknowns via long distance lines that a dialed "2" from one area may look like a dialed 3 from another area. Thus one might be forced to use a system that will ask the recipient to dial a "2"; and then based on the data received in a given time interval, a baseline would be established, and all other responses are related to this baseline count. Thus, when a "1" or a "3" is dialed, the received data time interval will be less or more. The system software is initialized by asking the recipient to utilize his own telephone to dial a specific number such as "2" and measuring the time interval of signal produced by his dialing of the number "2". Then by analysis of the signal coming back over the line, a "1" can be deciphered or a "3" can be deciphered based on the amount of relative signal produced on the telephone line. This eliminates the problem of various telephone systems and lines, as well as instruments that produce the make/break signals, be they the standard rotary make/break relays or synthesized make/break relay telephones. In other words, a number "1" would be one half the signal associated with a "2"; and a "3" would be one and a half times the signal associated with a "2".

CONCLUSION

In summary, the subject system has the following features:

First, the subject system utilizes multiple, identical voice synthesizers, with identical voice synthesizers being utilized in number of Telephone Interface Units for simultaneous polling over numbers of lines, for reliability, and for ease of access to permit fast random access branching that eliminates "dead time". The utilization of multiple identical voice synthesizers permits uniform polling voices to be utilized so that the results are not skewed. The utilization of multiple identical speech synthesizers also provides a much smaller package than is possible with tape machines, and is not prone to tape breakage or destruction.

Secondly, the use of a personal computer or other local computer permits message set up and editing, telephone number generation, and TIU polling in a token-passing system for a number of identically-configured Telephone Interface Units. Each TIU operates independently for simultaneous polling and receipt of information over a number of dedicated telephone lines once the telephone number has been inputted from the personal computer. Cross-correlation of received information is made possible with the use of a Master Unit serving as an interface to the Telephone Interface Units to provide a unique on-site capability for the polling system.

A further feature is a programming code unique to polling operations which makes the subject system exceptionally easy to program.

Moreover, the elimination of "dead time" is a result of initial easy message editing; a quick branching process is accomplished through the aforementioned utilization of the synthesizers and memories within the Telephone Interface Units; the utilization of an exception-

visited 2/18/2020

ally efficient, rapid incoming signal recognition system; and a system of ignoring noise between rings or busy signals so that noise is not acted upon erroneously.

Further, on-line, real-time, cross-correlated statistics generation from multiple answers, as opposed to a single answer statistics, is an important feature of the subject system.

The aforementioned rapid signal identification is a result of software operating on a clipped incoming signal, with the interpulse spacing then determining the frequency, and thus the type of signal that is coming in over the telephone line. This system can reliably distinguish a ring signal, a busy signal, a voice signal, a recording machine, or noise, and permits a software rather than a hardware implementation of signal recognition.

Additionally, and importantly, branching in the subject system may be based on answers and more particularly can be based on either a non-response to a particular question or an erroneous answer. Branching on either a non-response or an erroneous answer is particularly important in polling because it prevents contamination in the polling with erroneous answers. Thus, the result of the polling process is the result of obtaining valid answers and assures more accurate results with the minimum of annoyance for those participating in the poll. In one embodiment such branching takes place only after the question has been re-asked after an invlaid answer. Moreover, a voice signal once detected will result in the running of the poll, whereas a predetermined number of ring or busy will terminate the call. SIT detection will also terminate the call.

Further, the subject polling system utilized permits selection of telephone groupings in terms of exchanges in which the first three digits are selected for given areas, followed by random number generation to permit convenient designation of polling areas followed by complete randomness in recipient selection, with this type of telephone number generation permitting rapid analysis by area in terms of the exchanges designated.

Additionally, one of the aspects of the subject invention is the inactivation of the polling process after compiling a predetermined number of valid responses. This system, while it may be operated to poll over a given time period, can be made to poll over such time as is necessary to provide a predetermined number of valid responses. This can be combined with the prevention of polling at certain periods of the day or polling at predetermined periods of the day. Regardless of when the polling system is set to operate, it is the determination of a predetermined number of valid responses, which in one embodiment, shuts down the polling process.

Moreover, the subject system can be configured rapidly into a "call out" polling system such as described or a "call in only" polling system in which there is no call out feature. The public telephone network can be used to automatically determine which of the Telephone Interface Units are free to receive an incoming call.

Further, a pulse dialing detection system is provided in which the detection of a pulse dialing telephone at the recipient's site is determined by a footprint match of number of pulses followed by a predetermined silence. The pulse dialing detection is also enhanced through a system which requests a recipient having a pulse dialing telephone to dial a predetermined number which produces a certain noise time pattern from which other dialed numbers can be determined.

It will be appreciated that the above features can be taken either singly or in combination.

Having above indicated a preferred embodiment of the present invention, it will occur to those skilled in the art that modifications and alternatives can be practiced within the spirit of invention. It is accordingly intended to define the scope of the invention only as indicated in the following claims.

What is claimed is:

1. In an automatic telephone polling system having numbers of telephone interface units, each connected to a different line and each having a digitally-driven speech synthesis system, means for programming said units including a master unit having the same type speech synthesis system, whereby all telephone interface units can be easily simultaneously and initially programmed with the same messages from the master unit, and whereby all polling from the telephone interface units will have a uniformity dictated by the speech synthesis generated by the master unit.

2. A system for conducting simultaneous information exchange over a number of telephone lines, including both DTMF and rotary/pulse signals, comprising:

a number of individually-programmed telephone interface units for transmitting microphone-recorded predetermined voice messages over respective telephone lines and for receiving live information transmitted over the corresponding telephone line from an individual at the other end of a telephone line, each telephone interface unit operating independently once connected to a telephone line; and

computer means connected to each telephone interface unit for programming said unit prior to its connection to a telephone line;

each said telephone interface unit including means for storing responses received from said individual as ASCII characters, said computer means including means for collecting said responses in each telephone interface unit.

3. The system of claim **2** wherein said computer means includes means for cross-correlating stored data and for displaying the results of the correlation.

4. A system for conducting a poll comprising:

a computer, a computer program for setting up the poll format, for designating a set of telephone numbers, and for storing the results of the poll taken;

a number of substantially-identical telephone interface units coupled one each to a different telephone line, and each having its own microcomputer and storage, a voice synthesizer, and means for recognizing types of incoming signals; and

a master unit for operably connecting the telephone interface units to said computer during initialization of the telephone interface units, to provide a telephone number to a telephone interface unit, and only to recover information stored in the telephone interface unit whereby each telephone interface unit operates independently of said computer during a polling sequence.

5. The system of claim **4** wherein said master unit includes a master unit voice synthesizer having a digital-to-analog converter and means for programming said master unit voice synthesizer under control of said computer, with said programming means including a microphone, an analog-to-digital converter, storage means, audio reproduction means coupled to said voice synthesizer, and means for reading out said storage means to said master unit voice synthesizer.

visited 2/18/2020

6. The system of claim 4 wherein the voice synthesizer of said master unit is substantially identical to those of said telephone interface units to facilitate the programming of each telephone interface unit with identical sounding messages.

7. The system of claim 4 wherein said master unit includes means for storing both messages and formatting instructions, and means for transmitting messages and formatting instructions to each of said telephone interface units.

8. The system of claim 4 wherein each of said telephone interface units includes both hardware and software means for determining the types of incoming signals.

9. The system of claim 8 wherein said software means includes a hardware clipping circuit and means for determining the time between adjacent pulses produced by said clipping circuit, thereby to permit derivation of the frequency of an incoming signal.

10. The system of claim 8 wherein said software means includes means for sampling any incoming signal at predetermined times and for storing the frequency or frequencies of said incoming signal in frequency bins so as to provide a rough spectral analysis of the incoming telephone signals.

11. The system of claim 8 wherein said software means includes means responsive to a predetermined spectral analysis for branching to a predetermined portion of said poll format.

12. The system of claim 4 wherein said system includes a digitally-driven voice synthesizer, digital storage means for digitally storing a message to be transmitted, and means for changing the start and end addresses of said digital storage means for trimming said message and thus trimming dead time out of said polling sequence.

13. The system of claim 5 which includes a digitally-driven voice synthesizer, whereby a message can be trimmed and whereby branching to given messages can be made natural sounding.

* * * * *

visited 02/18/2020

Congressional Record
102nd Congress (1991-1992)

TELEPHONE CONSUMER PROTECTION ACT (Senate - November 27, 1991)

Mr. HOLLINGS. Mr. President, I am pleased to report that we have come to an agreement with the House on a bill to restrict invasive uses of telephone equipment. The amendment version before the Senate today of S. 1462, which I introduced earlier this year, is the result of negotiations with the industry and Members on both sides of the aisle in the House and the Senate. This amendment incorporates the principal provisions of S. 1462 and S. 1410, which passed the Senate on November 7, and H.R. 1304, which passed the House on November 18. I believe that this revised bill responds to all the major concerns of the parties involved, and I urge my colleagues to support it.

The bill includes provisions to restrict telephone calls that use an automated or computerized voice. These calls are a nuisance and an invasion of our privacy. The complaints received by the Federal Communications Commission [FCC] and my office indicate that people find these calls to be objectionable regardless of the content of the message or the initiator of the call. Restricting such calls is constitutionally acceptable as a reasonable place and manner restriction.

At the same time, there may be certain types of automated or prerecorded calls that are not as invasive of privacy rights as others. I use the term privacy rights to include the concepts of privacy invasion and nuisance. Therefore, this bill includes a provision that allows those who use automated or prerecorded voice systems to apply to the FCC for an exemption from this prohibition. The bill gives the FCC the authority to exempt from these restrictions calls that are not made for a commercial purpose and categories of calls that the FCC finds do not invade privacy rights. If the FCC determines that such an exemption is warranted based on the record it develops, the FCC may grant such an exemption, subject to whatever conditions it determines to be appropriate.

The phrase `calls that are not made for a commercial purpose' is intended in the constitutional sense and is intended to be consistent with the court decisions which recognize that noncommercial speech can receive less protection than commercial speech. This phrase is intended to allow the FCC to design rules to implement this bill that are consistent with the free speech guarantees of the Constitution if it finds that a distinction between commercial and noncommercial calls is justified and can be supported by the record.

The FCC is given the authority to exempt certain types of calls, and the FCC is not limited to considering existing technologies. The FCC is given the flexibilty to consider what rules should apply to future technologies as well as existing technologies.

Visited 02/18/2020

Some telephone companies are beginning to offer a voice messaging service which delivers personal messages to one or more persons. A person calling from a pay telephone at an airport, for instance, may call and leave a recorded message to be delivered later if the called line is busy or no one answers the call. Some debt collection agencies also use automated or prerecorded messages to notify consumers of outstanding bills. The FCC should consider whether these types of prerecorded calls should be exempted and under what conditions such an exemption should be granted either as a noncommercial call or as a category of calls that does not invade the privacy rights of consumers.

In considering whether to exempt certain calls, however, the bill states that the FCC may not exempt telephone solicitations. These calls are certainly commercial calls and the evidence before the Congress leaves no doubt that these types of calls are an invasion of privacy and a nuisance.

As stated earlier, this bill prohibits automated or prerecorded telephone calls to the home, unless the called party consents to receiving such a call, or unless the call is initiated for emergency purposes. The FCC must determine what constitutes an emergency purpose. In defining this term the FCC could find that `emergency purpose' includes any automated telephone call that notifies consumers of impending or current power outages, whether these outages are for scheduled maintenance, unscheduled outages caused by storms or similar circumstances, cut off of power due to late payment of bills, power interruptions for load management programs, or other reasons. Power interruptions can be detrimental to the public health and safety. Therefore, the FCC should consider whether

all or certain types of outages should be considered an emergency.

Section 227(e)(1) clarifies that the bill is not intended to preempt State authority regarding intrastate communications except with respect to the technical standards under section 227(d) and subject to section 227(e)(2). Pursuant to the general preemptive effect of the Communications Act of 1934, State regulation of interstate communications, including interstate communications initiated for telemarketing purposes, is preempted.

I want to clarify a couple of other changes to the bill that we have made in response to some concerns of the telemarketing industry. We have included a private right of action for consumers harmed by authomated or prerecorded calls and a different private right of action for consumers who receive telemarketing soliciations. We have amended this provision in order to give telemarketers an affirmative defense in court so that this provision does not impose strict liability on any telemarketer that might violate the provisions of the bill.

Finally, I want to clarify how this bill applies to carriers who might unknowingly transmit calls made in violation of this bill. It is not our intention that a carrier should be held liable for transmitting over the carrier's network any call or message in violation of this legislation made by an entity other than the carrier. This intention is consistent with our policy that carriers should not be responsible for the content of messages delivered over their networks. If carriers were held responsible for such transmissions, they might be forced to monitor telephone conversations, which would not be in the public interest. To the extent carriers are responsible for initiating or placing telephone calls or messages, however, they must comply with the terms of this bill.

Visited 02/18/2020

I thank my counterparts on the House side, Chairman **Dingell** of the House Energy and Commerce Committee, Chairman **Markey** of the House Telecommunications and Finance Subcommittee, and the ranking minority member of the Telecommunications and Finance Subcommittee, Mr. **Rinaldo.** I also recognize the efforts of Senator **Danforth,** the ranking member on the Senate Commerce Committee, Senator **Inouye,** chairman of the Senate Communications Committee, and Senator **Pressler,** the author of S. 1410, in assisting in the development of this compromise. I am pleased that we were able to accommodate the interests of all Members in a bipartisan way.

[Page: S18784]

THIS SEARCH	*THIS DOCUMENT*	*THIS CR ISSUE*	*GO TO*
Next Hit	Forward	Next Document	New CR Search
Prev Hit	Back	Prev Document	HomePage
Hit List	Best Sections	Daily Digest	Help
	Contents Display		

Stay Connected with the Library All ways to connect »

Find us on **Subscribe & Comment** RSS & E-Mail Blogs **Download & Play** Podcasts Webcasts iTunes U

About | Press | Site Map | Contact | Accessibility | Legal | External Link Disclaimer | USA.gov Speech Enabled